PEDESTAL INSTALLATION & RETROFIT GUIDE

BLINK SHASTA 80

Version 1.0

© 2026 by Blink Charging Co. Its Affiliates and Subsidiaries (“Blink”)

No part of the contents of this document may be reproduced or transmitted in any form or by any means without the express written permission of Blink. The contents of this document have been verified by the manufacturer to be consistent with the described components; however, inconsistencies sometimes occur. Such inconsistencies should be brought to the attention of a Blink representative. Changes to this manual may be made at any time without notice.

Disclaimer of Consequential Damages

Blink is not responsible for the use or application by any person of the materials in this manual. **Blink** is not responsible for damages, either direct or consequential, arising out of or relating to the use or application of these materials.

Certain sections of this manual are meant as a guide for professional electricians. The manual contains general guidelines and may not provide instructions for your specific situation. Do not attempt installation if you lack the knowledge and understanding required for the installation, otherwise personal injury and/or death as well as property damage or loss could occur.

Electricity is dangerous and can cause personal injury or death as well as other property loss or damage if not used or constructed properly. If you have any doubts whatsoever about performing the installation of the equipment, please do the smart thing and hire a licensed electrician to perform the work for you.

Never work with live voltage. Always disconnect the power source before working with electrical circuits.

When performing the installation, please read and follow this manual. Additionally, always follow your local electrical code and requirements which are specific to local areas.

Notice

Changes or modifications not expressly approved by the party responsible for compliance could void the user's authority to operate the equipment.

 Copyright © 2026 Blink Charging Co. All rights reserved.

CONTENTS

1. TOOLS REQUIRED FOR ASSEMBLY 4

2. PEDESTAL PACKAGE CONTENTS 4

2.1. Pedestal Unboxing and Disassembly 5

3. CHARGING STATION INSTALLATION 6

3.1. PEDESTAL INSTALLATION 6

3.1.1. Site Location 7

3.1.2. Pedestal Drilling Template Installation 7

3.1.3. Pedestal Installation 8

3.1.4. Retrofitting an Existing Pedestal 10

3.2. Charger Head Unit Installation 12

Copyright © 2026 Blink Charging Co. All rights reserved.

1. TOOLS REQUIRED FOR ASSEMBLY

#	Tool	Notes
1	Metric Allen Keys	3mm, 4mm
2	Wrench or socket	17mm, 19mm
3	Electric drill	For drilling holes in pedestal enclosure if required, and for use with provided T30 Torx bit
4	¼” metal drill bit	Only if retrofitting legacy pedestal
5	1+3/8” metal hole saw	Only if retrofitting legacy pedestal
6	Masonry Drill Bit(s) & Driver	For use with provided M12 concrete anchors

Table 1 – Tools required for assembly

2. PEDESTAL PACKAGE CONTENTS

#	Part	Qty	Image
1	ECO Pedestal Assembly	1	
2	ECO Pedestal Drill Template	1	
3	M5x15mm screws and nuts (for Wall Mount Bracket, Cable Hanger Bracket, and Holster Bracket)	8	
4	T30 Tamper-Resistant Torx Driver Bit	1	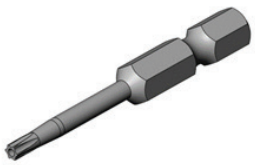
5	M12 Concrete Anchor Bolts	4	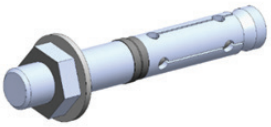

Table 2 – Package contents

 Copyright © 2026 Blink Charging Co. All rights reserved.

2.1. PEDESTAL UNBOXING AND DISASSEMBLY

Unbox and disassemble the Pedestal unit as shown below:

1. Remove top cover (M6x60mm tamper-resistant Torx screws) and Mounting bracket (M10x20mm bolts)

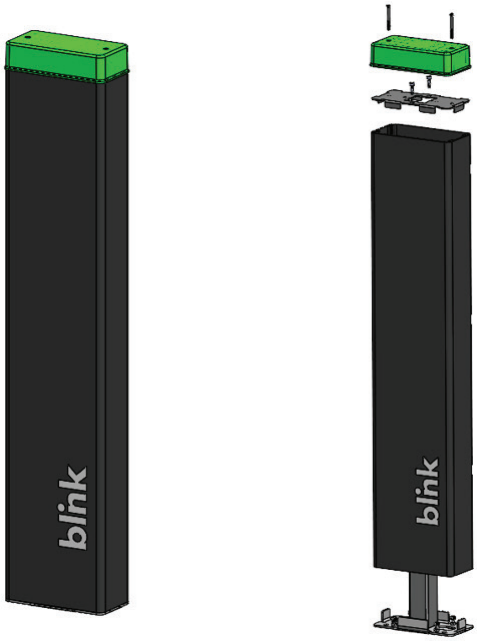

Fig. 1 – Pedestal disassembly step 1

2. Separate Pedestal Enclosure from Base Unit

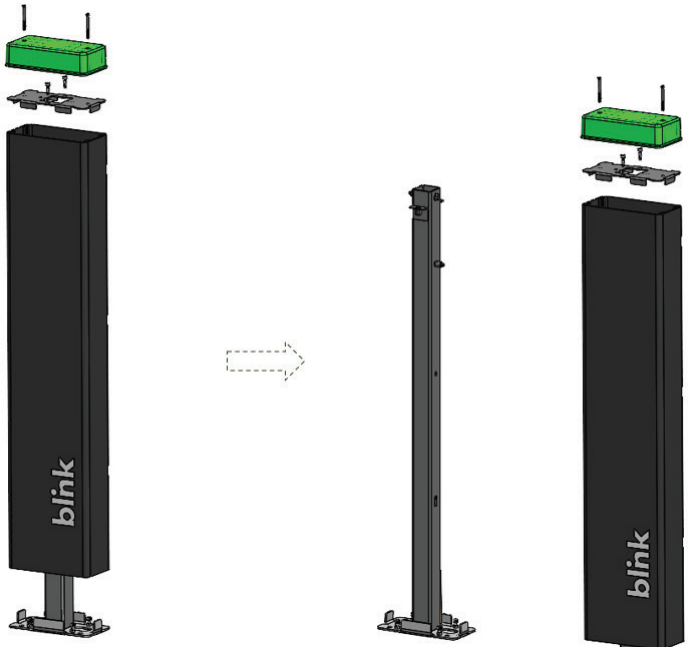

Fig. 2 – Pedestal disassembly step 2

Copyright © 2026 Blink Charging Co. All rights reserved.

Ensure that the box contains the following items.

Parts for Assembly		
Item	**Parts**	**Qty**
1	ECO Pedestal Base Unit	1
2	ECO Pedestal Enclosure	1
3	ECO Pedestal Cover Plate	1
4	M10 x 20 mm, Universal Top Bracket Bolt	2
5	ECO Pedestal Mounting Bracket	1
6	ECO Pedestal Top Cover	1
7	M6 x 60mm Tamper-Resistant Button Head Torx Screws	2

Table 3 – Pedestal parts list

3. CHARGING STATION INSTALLATION

3.1. PEDESTAL INSTALLATION

Fig. 3 – Pedestal installation

 Copyright © 2026 Blink Charging Co. All rights reserved.

3.1.1. SITE LOCATION

Select the location for the charging station. To mount the charging station, first prepare a concrete pad properly aligned to the parking space. The concrete pad should be positioned such that the distance between the charging station and electric vehicle is enough to minimize the likelihood of damage.

NOTE: Electrical wiring must be run through a conduit inside the concrete pad; the only wire penetration point on the pedestal is through the bottom

3.1.2. PEDESTAL DRILLING TEMPLATE INSTALLATION

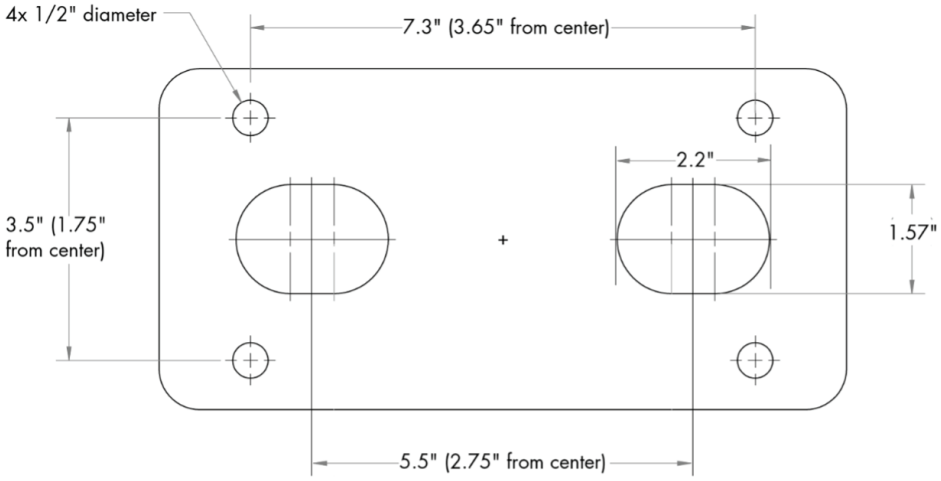

Fig. 4 – Pedestal drilling template dimensions

- Ensure that at least 40” of wire extends out of the conduit (including Ethernet if applicable). Maximum conduit outer diameter is 1.5”.
- Position the Drilling Template so that the conduit location is towards the right side of the Drilling Template when viewed from the front (see below).
- Install the Drilling Template using the provided concrete anchors, ensuring the anchors protrude roughly 0.7” above the Drilling Template. The Drilling Template should be installed flush with the ground.

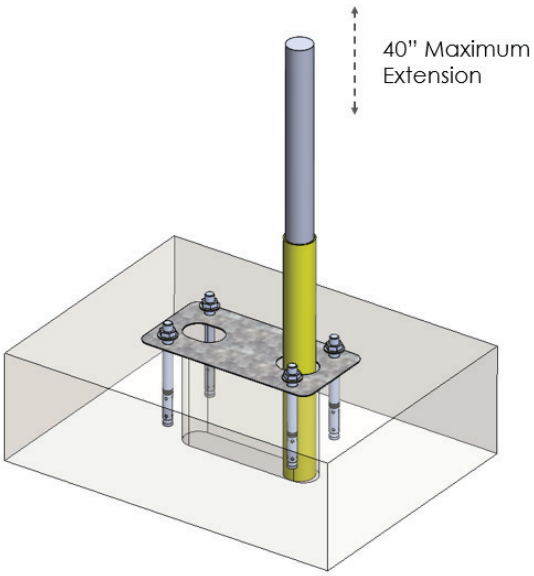

Fig. 5 – Drilling Template installation using concrete anchors

Copyright © 2026 Blink Charging Co. All rights reserved.

3.1.3. PEDESTAL INSTALLATION

Install Pedestal Base Unit:

⚠ WARNING

VERIFY ALL CONDUCTORS ARE DE-ENERGIZED BEFORE PROCEEDING.

- Remove nuts and washers from anchor bolts.
- Place the Pedestal Base Unit on the drilling template such that the bolt holes and conduit opening are aligned.
- Ensure that the electric wires are long enough that they can be easily accessed through the conduit hole in the pedestal enclosure.
- Re-install the anchor bolt nuts and washers, but do not tighten fully.
- Locate the (4) leveling screws on the pedestal base assembly. Adjust leveling screws to make Pedestal Base plumb (check with Level at two points separated by 90 degrees).
- Gradually tighten anchor bolts to secure the Pedestal Base. Re-check for plumb.

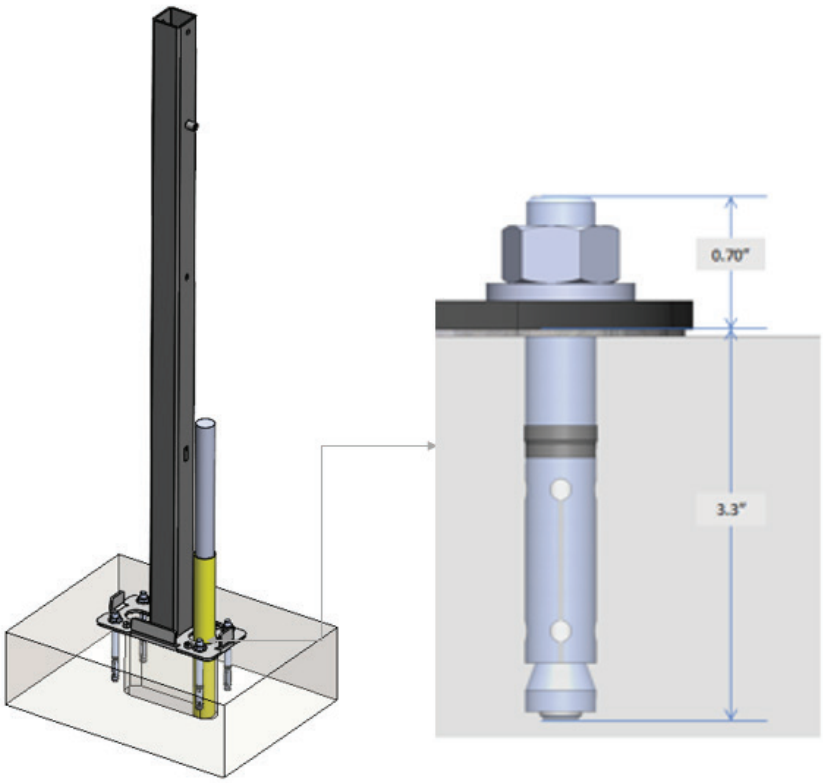

Fig. 6 – Installing pedestal base assembly

 Copyright © 2026 Blink Charging Co. All rights reserved.

Install Pedestal Enclosure to Pedestal Base Unit:

- Position pedestal enclosure over pedestal base unit.
- Route electrical wiring through conduit hole in pedestal enclosure.

Fig. 7 – Installing pedestal bottom enclosure

Install Wall-Mount Bracket, Cable Hanger Bracket, and Holster Bracket:

- Using the provided M5 x 15mm screws and nuts, install the Shasta charger's Wall Mount bracket, Cable Hanger bracket, and Holster bracket in the pre-drilled holes.

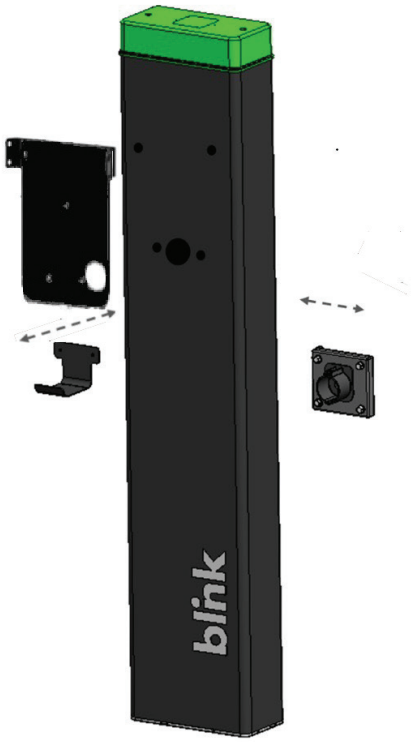

Fig. 8 – Charger mounting brackets installation

Copyright © 2026 Blink Charging Co. All rights reserved.

Complete Pedestal Assembly:

- Install mounting bracket using 2x M10x20mm bolts
- Install top cover using 2x M6x60mm bolts

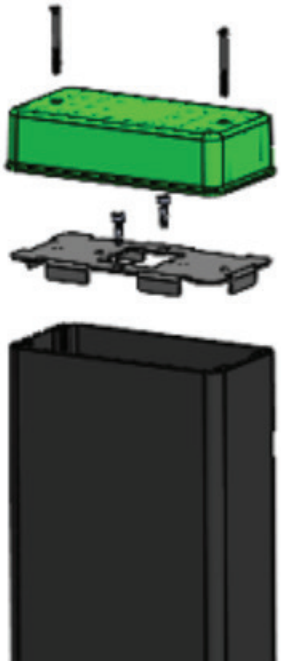

Fig. 9 – Install mounting bracket and top cover

3.1.4. RETROFITTING AN EXISTING PEDESTAL

Note: For retrofitting existing ECO pedestal or Triangular/Rectangular pedestal stock or replacing an existing IQ200 or MQ200 unit:

- Line the Shasta charger's wall mount bracket up with the upper 2 existing holes in the pedestal enclosure. Temporarily attach the wall mount bracket to the pedestal enclosure using the provided M5x15mm screws and nuts.
- Mark and drill additional ¼" mounting holes for the Shasta wall mount bracket as necessary, using the wall mount bracket itself as a guide.
- Drill 1+3/8" conduit hole in the enclosure using the wall mount bracket as a guide.
- Drill additional ¼" mounting holes for the cable hanger bracket and holster bracket, using the dimensions below as a guide for the height.

 Copyright © 2026 Blink Charging Co. All rights reserved.

Legacy Eco Pedestal Retrofit (Mount holster to side of pedestal enclosure):

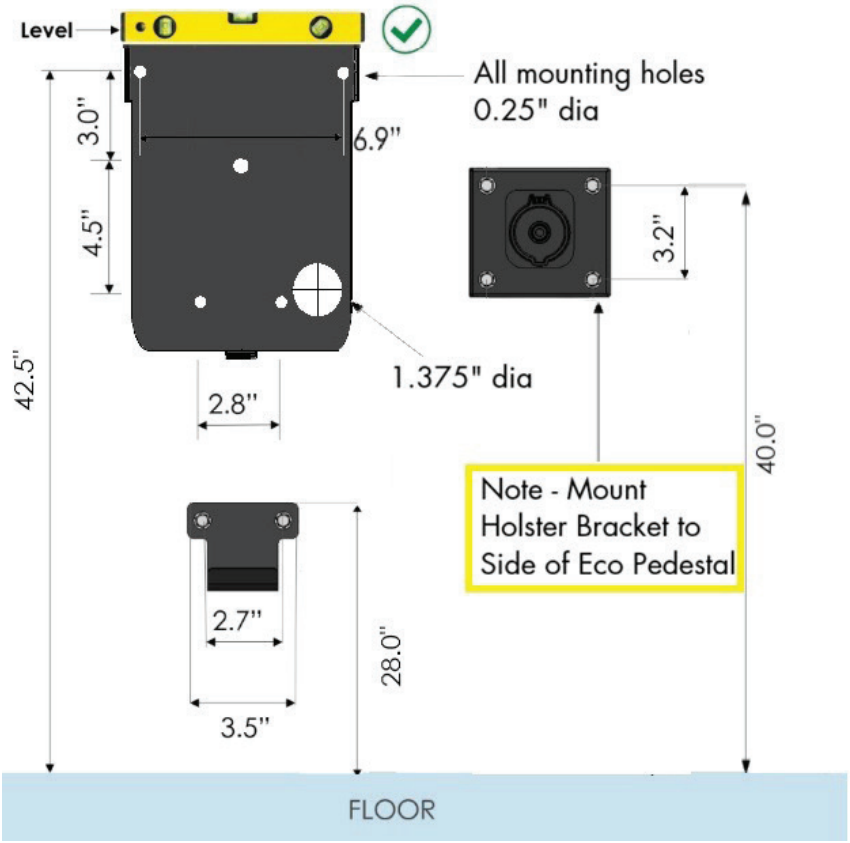

Fig. 10 – Legacy Eco pedestal retrofit dimensions

Triangular/Rectangular Pedestal Retrofit (Mount holster to front of pedestal enclosure):

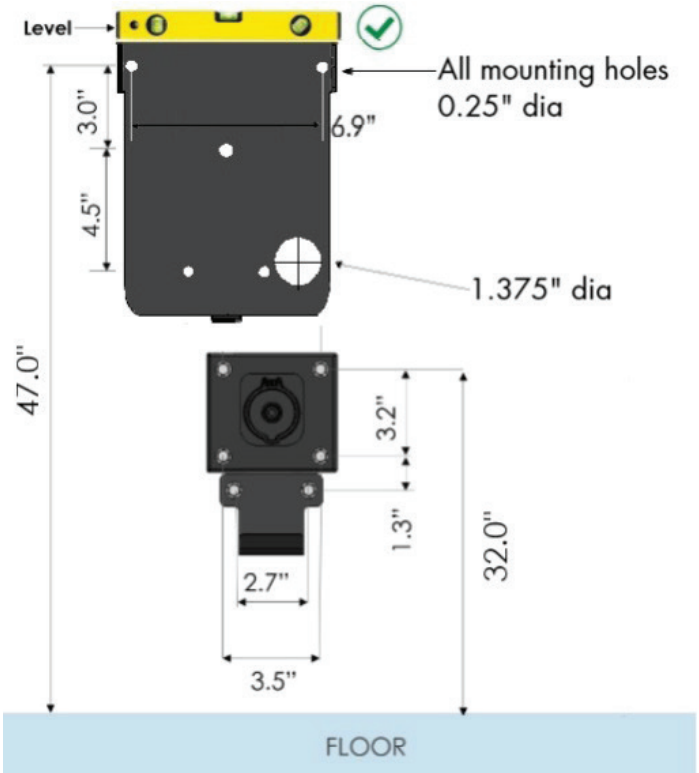

Fig. 11 – Triangular/Rectangular pedestal retrofit dimensions

Copyright © 2026 Blink Charging Co. All rights reserved.

3.2. CHARGER HEAD UNIT INSTALLATION

⚠ CAUTION

- Refer to General Requirements section for station weights.
- Carefully place the charging station head unit on top of the wall mount bracket as shown in the illustration.
- Align the guide poles in the wall mount bracket with the base of the head unit.
- Secure the charging station head unit to the wall bracket with the 5 mounting screws (M4x12mm - two from right and left side and one from bottom side).
- Ensure that the charging station is plumb using a level. Check that the head unit is now securely fastened to the wall mount.

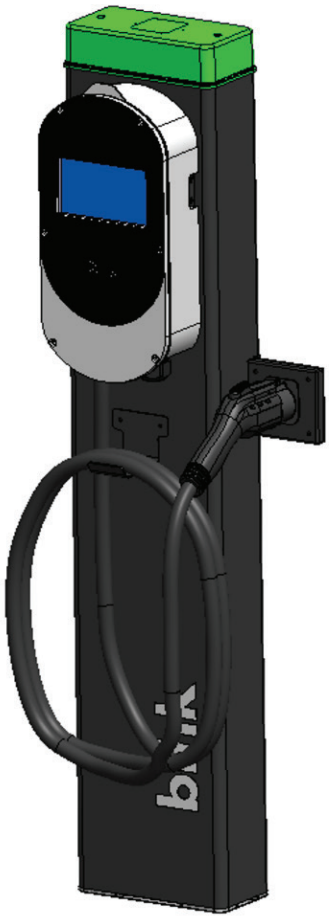

Fig. 12 – Head unit installation

 Copyright © 2026 Blink Charging Co. All rights reserved.