INSTALLATION MANUAL

BLINK SHASTA 80

Version 2.1

© 2026 by Blink Charging Co. Its Affiliates and Subsidiaries (“Blink”)

© 2026 by Blink Charging Co. Its Affiliates and Subsidiaries (“Blink”)

No part of the contents of this document may be reproduced or transmitted in any form or by any means without the express written permission of Blink. The contents of this document have been verified by the manufacturer to be consistent with the described components; however, inconsistencies sometimes occur. Such inconsistencies should be brought to the attention of a Blink representative. Changes to this manual may be made at any time without notice.

Disclaimer of Consequential Damages

Blink is not responsible for the use or application by any person of the materials in this manual. Blink is not responsible for damages, either direct or consequential, arising out of or relating to the use or application of these materials.

Certain sections of this manual are meant as a guide for professional electricians. The manual contains general guidelines and may not provide instructions for your specific situation. Do not attempt installation if you lack the knowledge and understanding required for the installation, otherwise personal injury and/or death as well as property damage or loss could occur.

Electricity is dangerous and can cause personal injury or death as well as other property loss or damage if not used or constructed properly. If you have any doubts whatsoever about performing the installation of the equipment, please do the smart thing and hire a licensed electrician to perform the work for you.

Never work with live voltage. Always disconnect the power source before working with electrical circuits.

When performing the installation, please read and follow this manual. Additionally, always follow your local electrical code and requirements which are specific to local areas.

Notice

Changes or modifications not expressly approved by the party responsible for compliance could void the user’s authority to operate the equipment.

CONTENTS

1. SAFETY AND COMPLIANCE 5

1.1. GENERAL 6

1.2. STATEMENTS 6

2. PRODUCT OVERVIEW 8

2.1. PRODUCT SPECIFICATIONS 8

2.2. PRODUCT DIMENSIONS 10

2.2.1. Shasta 80 Head Unit Dimensions: 10

3. PLANNING AND DESIGN 10

3.1. ELECTRICAL REQUIREMENTS 10

3.1.1. 208 / 240 VAC SYSTEMS 11

3.1.2. DERATE SETTING & CIRCUIT BREAKER SIZING 12

3.2. COMMUNICATION REQUIREMENTS 13

3.3. NETWORK PLATFORM REQUIREMENTS 15

3.4. TOOLS REQUIRED FOR INSTALLATION 15

4. CHARGING STATION - PACKAGE CONTENTS 16

4.1. SHASTA 80 16

5. CHARGING STATION INSTALLATION 18

5.1. IMPORTANT SAFETY INSTRUCTIONS 18

5.2. WALL MOUNT INSTALLATION 19

5.2.1. Site Location 19

5.2.2. Preparing the Wall 20

5.2.3. Preparing the Holster 21

5.2.4. Wall Mount Bracket, Holster & Cable Hanger Installation 22

5.2.5. Head Unit Installation 22

5.3. PEDESTAL INSTALLATION 23

5.3.1. ECO Pedestal Package Contents 24

5.3.2. ECO Pedestal Unboxing and Disassembly 25

5.3.3. Site Location 26

5.3.4. Pedestal Drilling Template Installation 26

5.3.5. Pedestal Installation 27

5.3.6. Retrofitting an Existing Pedestal 30

5.3.7. Charger Head Unit Installation 31

Copyright © 2026 Blink Charging Co. All rights reserved.

5.4. CONNECTING INPUT WIRING AND OUTPUT CABLE 32
5.4.1. Connecting Input Wiring 33
5.4.2. Connecting Output Cable 33
5.5. DERATE SWITCH 35
6. CABLE MANAGEMENT SYSTEM (CMS) - PACKAGE CONTENTS 37
6.1. WALL MOUNT CMS PACKAGE CONTENTS 37
7. CABLE MANAGEMENT SYSTEM (CMS) INSTALLATION 38
7.1. WALL MOUNTING CMS 38
7.1.1. Site Selection 38
7.1.2. CMS Wall Mount Bracket Installation 38
7.1.3. CMS Wall Mount Head Unit Installation 39
7.1.4. CMS Cable Clamp Installation 39
8. COMMISSIONING AND ENERGIZATION 40
8.1. STATION COMMISSIONING 40
8.2. INITIAL POWER-UP SEQUENCE 41
8.3. WI-FI/CELLULAR/ETHERNET SETUP 41
8.3.1. Wi-Fi Setup 42
8.3.2. Cellular Setup 43
8.3.3. Ethernet Setup 43
8.4. SIM CARD INSTALLATION 44
9. OPERATING INSTRUCTIONS 45
9.1. OPERATING PRECAUTIONS 45
9.2. OPERATING INSTRUCTIONS 46
9.2.1. Idle State 46
9.2.2. User Authorization 47
9.2.3. Charging 47
9.2.4. Charging Complete 48
9.3. TROUBLESHOOTING 49
9.4. CUSTOMER SUPPORT 50
10. CLEANING AND MAINTENANCE 50
11. WARRANTY 50

 Copyright © 2026 Blink Charging Co. All rights reserved.

1. SAFETY AND COMPLIANCE

This document provides instructions to install the Blink Charging Station and should not be used for any other products. This product must be installed in accordance with the National Electrical Code (NEC), the Canadian Electrical Code (CEC) or any applicable local code.

Review this manual and consult a licensed contractor and/or electrician before installation to ensure compliance with local building practices, climate conditions, safety standards, and state and local codes.

The Blink Charging Station should be installed by a licensed contractor/ electrician and inspected by a qualified installer prior to initial use. Under no circumstances will compliance with the information in this manual relieve the user of responsibility to comply with all applicable codes and safety standards.

This document describes the most common installation and mounting methods. Contact Blink where it is not possible to perform an installation using the procedures provided in this document.

Blink is not responsible for damage that may occur or result from installations that are not described in this document. This document is not offered as a formal design document. All designs for the installation of this product are the sole responsibility of the appropriately licensed and/or certified installing contractor.

The following signs are used throughout the installation manual following ANSI Z535 Standard:

Sign	Intended Use
⚠ DANGER	Situation will result in serious injury or death
⚠ WARNING	Situation could result in serious injury or death
⚠ CAUTION	Situation could result in moderate or minor injury
NOTICE	Situations that at worst will result in property damage and will not result in physical injuries

⚠ DANGER

MAKE SURE TO TURN OFF ALL BREAKERS BEFORE DOING ANY ELECTRICAL WORK!

DANGER

CAUTION

DO NOT USE THIS PRODUCT IF THERE IS ANY DAMAGE TO THE UNIT OR THE EV CHARGE CONNECTOR CABLE.
RISK OF ELECTRIC SHOCK. THIS PRODUCT CONTAINS NO USER SERVICEABLE PARTS.

ATTENTION

NE PAS UTILISER CE PRODUIT SI L'APPARIEL OU LE CABLE VE EST ENDOMMAGE.
RISQUE DE CHOC ELECTRIQUE. NE CONTIENT AUCUNE PIECE A REPARER PAR L'UTILISATEUR.

Copyright © 2026 Blink Charging Co. All rights reserved.

WARNING / NOTICE

AUTOMATIC RESET FEATURE IS PROVIDED.

WARNING / AVERTISSEMENT

FOR USE WITH ELECTRIC VEHICLES
POUR UTILISATION AVEC DES VEHICULES ELECTRIQUES

WARNING

ONLY FOR USE WITH VEHICLES THAT DO NOT REQUIRE VENTILATION. AVOID RISK OF FIRE OR ELECTRICAL SHOCK, DO NOT USE THIS DEVICE WITH AN EXTENSION CORD.

AVERTISSEMENT

UNIQUEMENT POUR UTILISATION AVEC DES VEHICULES NE NECESSITANT PAS DE VENTILATION POUR EVITER TOUT RISQUE D'INCENDIE OU DE CHOC ELECTRIQUE, NE PAS UTILISER CET APPARIEL AVEC UNE RALLONGE.

1.1. GENERAL

The Blink Station is grounded through a dedicated conductor to the ground connection at the power distribution panel. This equipment has been tested and found to comply with the limits for a Class A digital device, pursuant to Part 15 of the FCC rules. These limits are designed to provide reasonable protection against harmful interference when the equipment is operated in a commercial environment.

NOTICE

The equipment generates, uses, and can radiate radio frequency energy and, if not installed and used in accordance with the instruction manual, may cause harmful interference to radio communications.

1.2. STATEMENTS

Reasonable effort has been made to ensure that the specifications and other information in this manual are accurate and complete at the time of publication. However, specifications and other information in this manual are subject to change at any time without prior notice.

NOTICE

Use of the Blink Charging Station in a manner not intended or any modification not approved by the manufacturer will void the limited warranty. Other than the limited product warranty provided by Blink, this manual and the Blink Inc. products are provided "AS IS," and Blink Inc. expressly disclaim all implied warranties, including any warranty of design, merchantability, and fitness for a particular purposes and non-infringement, to the maximum extent permitted by law.

 Copyright © 2026 Blink Charging Co. All rights reserved.

NOTICE

IN NO EVENT SHALL BLINK INC. OR ITS AUTHORIZED DISTRIBUTORS BE LIABLE FOR ANY INDIRECT, INCIDENTAL, SPECIAL, PUNITIVE, OR CONSEQUENTIAL DAMAGES, INCLUDING WITHOUT LIMITATION, LOST PROFITS, LOST DATA, LOSS OF USE, COST OF COVER, OR LOSS OR DAMAGE TO THE BLINK CHARGING STATION ARISING OUT OF OR RELATING TO THE USE OR INABILITY TO USE THIS MANUAL, OR RELATED PRODUCT, EVEN IF BLINK OR ITS AUTHORIZED DISTRIBUTORS HAVE BEEN ADVISED OF THE POSSIBILITY OF SUCH DAMAGES.

All products or services mentioned are the trademarks, service marks, registered trademarks, or registered service marks of their respective owners. This material is protected by the copyright laws of the United States and other countries. It may not be modified, reproduced, or distributed without the prior, express written consent of Blink Network, LLC.

Copyright © 2026 Blink Charging Co. All rights reserved.

2. PRODUCT OVERVIEW

2.1. PRODUCT SPECIFICATIONS

ELECTRICAL – AC OUTPUT	
Number of Ports	One
Output Current	Configurable up to 80A
Hardware Output Current Derating	Yes
Power	Up to 19.2 kW @ 240 VAC
Energy Metering Accuracy	+/- 1%
Charging Connector	J1772 or NACS (SAE J3400)
ELECTRICAL – AC INPUT	
Input Connector	Hardwired
Voltage	208-240 VAC, 50-60H
Service Panel Breaker	1 x 100A Max, (Depending On Output Configuration)
Power Connection	Line 1, Line 2, and Ground (No Neutral)
Input Wire Gauge	Line 1, Line 2 – 1/0 - 8 AWG, Ground – 6 - 16 AWG
Input Electrical Conduit	1” Trade Size Max
SAFETY	
Ground Fault Circuit Interrupt	15-20mA
Automatic Plug-Out Detection	Power Terminated Per SAE J1772 Specifications
Over Voltage Category	OVC III
Surge Protection	6kV @ 3,000A
Other	Weld Detection, Overvoltage, Overcurrent, Overtemperature
FUNCTIONAL	
Connectivity	Ethernet, W-Fi, Cellular 4G LTE, WCDMA
Backend Protocol	OCPP 1.6J compliant, ISO15118-2 hardware-ready
Remote Management	Over-the-Air (OTA) Firmware Updates
Edge Intelligence	Cable Cut & Tamper Alert, Enclosure Open Alert, Multi Point Temperature & Humidity Monitoring, Charging Functions Available During, Communication Outage
USER INTERACTION	
Display	7” Color LCD
Authentication	RFID: ISO14443A/B (Mifare Classic)
Payment Methods	RFID Card or Mobile app

 Copyright © 2026 Blink Charging Co. All rights reserved.

ENVIRONMENTAL	
Enclosure	Aluminum, NEMA 3R Rated
Operating Humidity	Up to 95% Non Condensing Non-Condensing
Operating Temperature	-40C to +50C (-40F to 122F)
Storage Temperature	-40C to +60C (-40F to 140F)
Operating Altitude	<=9,840 ft
MECHANICAL	
Dimensions (H x W x D)	17.4” x 8.5” x 3.8”
Approximate Weights	Charger: 22 lbs., Wall mount: 1.1 lbs.
Mounting Option	Wall or Pedestal
Cable Length	25ft
Cable Management System	Optional
REGULATION	
Safety	UL 2594, UL 2231-1, UL 2231-2 Certified
Energy Metering	NIST HB 44 Compliant
EMI	FCC Part 15 Class A Compliant
Energy Efficiency	Energy Star Certified
Compliance	National Type Evaluation Program (NTEP)

Copyright © 2026 Blink Charging Co. All rights reserved.

2.2. PRODUCT DIMENSIONS

2.2.1. SHASTA 80 HEAD UNIT DIMENSIONS:

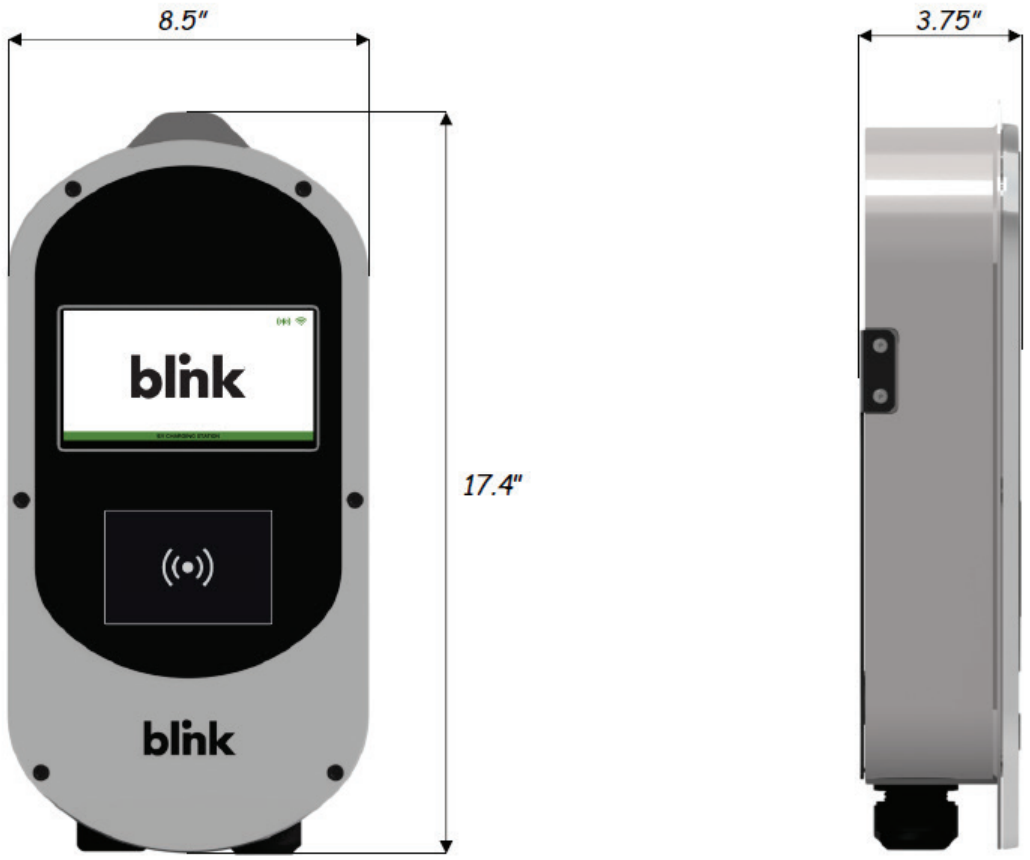

Fig. 1 – Shasta 80 charger

3. PLANNING AND DESIGN

3.1. ELECTRICAL REQUIREMENTS

⚠ WARNING

Blink EV charging stations require a solidly grounded electrical system with the presence of a main bonding jumper or system bonding jumper. Ungrounded sources or impedance grounded sources of any type (resistor/reactor) are not suitable for Blink EV charging stations.

⚠ WARNING

Improper connection of the equipment-grounding conductor is able to result in a risk of electric shock. Check with a qualified electrician or serviceman if you are in doubt as to whether the product is properly grounded. Do not modify the plug provided with the product – if it will not fit the outlet, have a proper outlet installed by a qualified electrician.

 Copyright © 2026 Blink Charging Co. All rights reserved.

⚠ WARNING

To reduce the risk of fire, electric shock, or injury to persons:

- Read all the instructions carefully before installing & using the product.
- Do not use this device if it is damaged, has visible cracks, or is missing parts.
- Connect only to properly grounded outlets and circuits in accordance with all local electrical codes.
- Do not install or use the equipment near flammable materials, vapors, or in wet environment unless rated for such use.
- Installation & Servicing should only be performed by qualified personnel.
- Disconnect the power at the breaker panel before servicing or cleaning the unit.

3.1.1. 208 / 240 VAC SYSTEMS

- The Shasta 80 charging stations require 240-volt (phase to phase) or 208-volt (phase to phase) input with an equipment grounding conductor.
- A Neutral conductor is not connected to the charger itself, but the Neutral or Center-Tap connection on the service transformer must be connected to Earth Ground.
- The Shasta 80 charging stations have internal GFCI protection; therefore, GFCI breakers are not needed unless required by local electrical code.

Connect the Shasta 80 Charging Stations to any one of the power sources below:

1. 240 VAC three phase, Delta system, Center tap grounded
2. 208 VAC three phase, Wye system, Bonded neutral
3. 240 VAC single phase, Bonded neutral

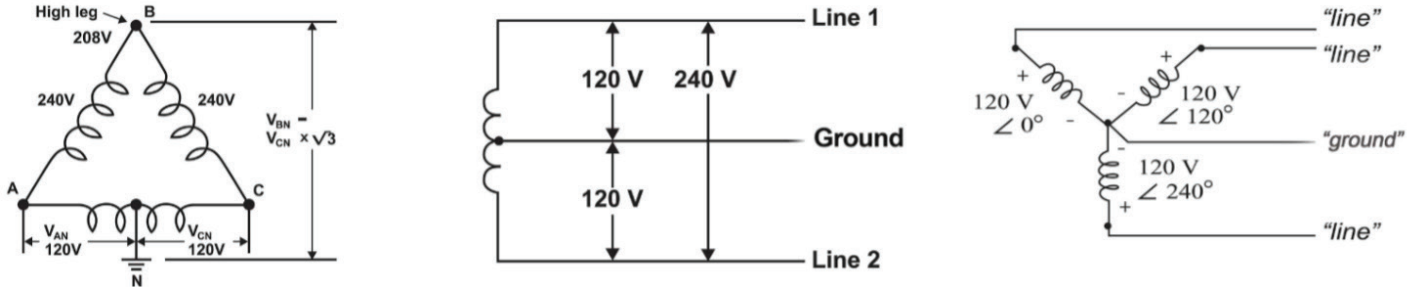

Fig. 2 – Acceptable transformer configurations

In a Wye system, connect the charging stations to any of the two lines. Do not use the system if it has a floating ground.

In a Delta system, connect the charging station only to a center-tapped grounded transformer as shown above. Connect the station to the side where ground is bonded (Line A and Line C above). This allows voltages to remain constant regardless of other loads on the system.

Copyright © 2026 Blink Charging Co. All rights reserved.

Please do not connect to other types of Delta transformers, as indicated below.

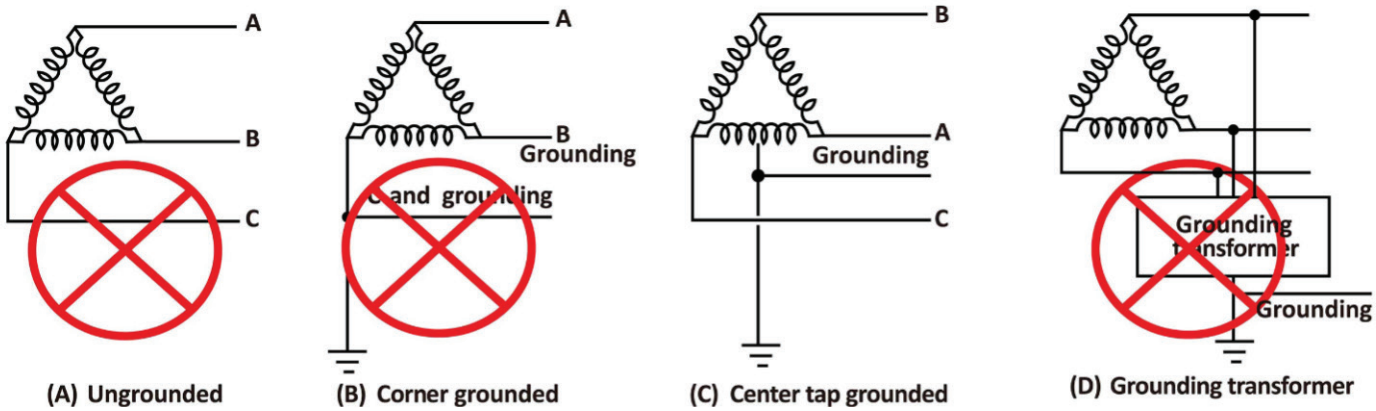

Fig. 3 – Unacceptable Delta transformer configurations

3.1.2. DERATE SETTING & CIRCUIT BREAKER SIZING

⚠ WARNING

Each Blink EV charging station is listed and labeled through Nationally Recognized Testing Laboratory compliance testing at the maximum or 'full rated' output. Each station is capable of continuous full rated output up to its labeled rating or modified default output configurations. In accordance with NEC Article 625, circuit breakers should be sized at 125% of the station's maximum amperage output.

The Shasta 80 charging stations are equipped with a "Derate" switch which will reduce the charger's maximum output current. The following table summarizes the circuit breaker size, station output amperage, and corresponding Derate switch settings. For instructions on accessing and adjusting the Derate switch, see section 5.5.

SHASTA 80 DERATE SETTINGS		
CIRCUIT BREAKER SIZE	MAXIMUM OUTPUT	DERATE SWITCH SETTING
100A	80A	7
80A	64A	6
70A	56A	5
60A	48A	4
50A	40A	3
40A	32A	2
30A	24A	1
20A	16A	0

Table 1 – Circuit breaker size vs charger output configuration for Shasta 80

 Copyright © 2026 Blink Charging Co. All rights reserved.

3.2. COMMUNICATION REQUIREMENTS

- **⚠ CAUTION**
  The equipment generates, uses, and can radiate radio frequency energy and, if not installed and used in accordance with the instruction manual, may cause harmful interference to radio communications.

- **NOTICE**
  This equipment has been tested and found to comply with the limits for a Class A digital device, pursuant to Part 15 of the FCC rules. These limits are designed to provide reasonable protection against harmful interference when the equipment is operated in a commercial environment.

- The Shasta 80 EV charging stations require cellular, Wi-Fi, or ethernet connectivity to function properly. It is recommended to check cellular and Wi-Fi signal strength before charger installation.

- To enable cellular connectivity, please reference the following cellular carriers and minimum operational signal requirement at each EV charging station location:

ATT or T-Mobile	4G LTE	Band 2 Band 4 Band 5 Band 12 Band 13
Verizon	4G LTE	Band 4 Band 13

Table 2 – Cellular carriers and bands

- Stations are shipped with a SIM card for one of the above carriers. Client must verify signal levels for all carriers and notify Blink prior to order shipment if a specific carrier is required.

- • Recommended cellular and Wi-Fi signal strength values - see the table below for reference:

Signal Strength	Cellular RSRP (dBm)	Cellular RSRQ (dB)	Wi-Fi RSSI (dBm)
Excellent	>= -80	>= -10	>= -67
Good	-80 to -90	-10 to -15	-67 to -70
Fair	-90 to -100	-15 to -20	-70 to -80

Table 3 – Cellular and Wi-Fi signal strength requirements

- **For instructions to install the SIM card, see section 8.4**

- **For instructions to set up Wi-Fi, cellular, or Ethernet communication, see section 8.3**

Copyright © 2026 Blink Charging Co. All rights reserved.

- Ethernet wiring is connected from the bottom of the head unit (see below).

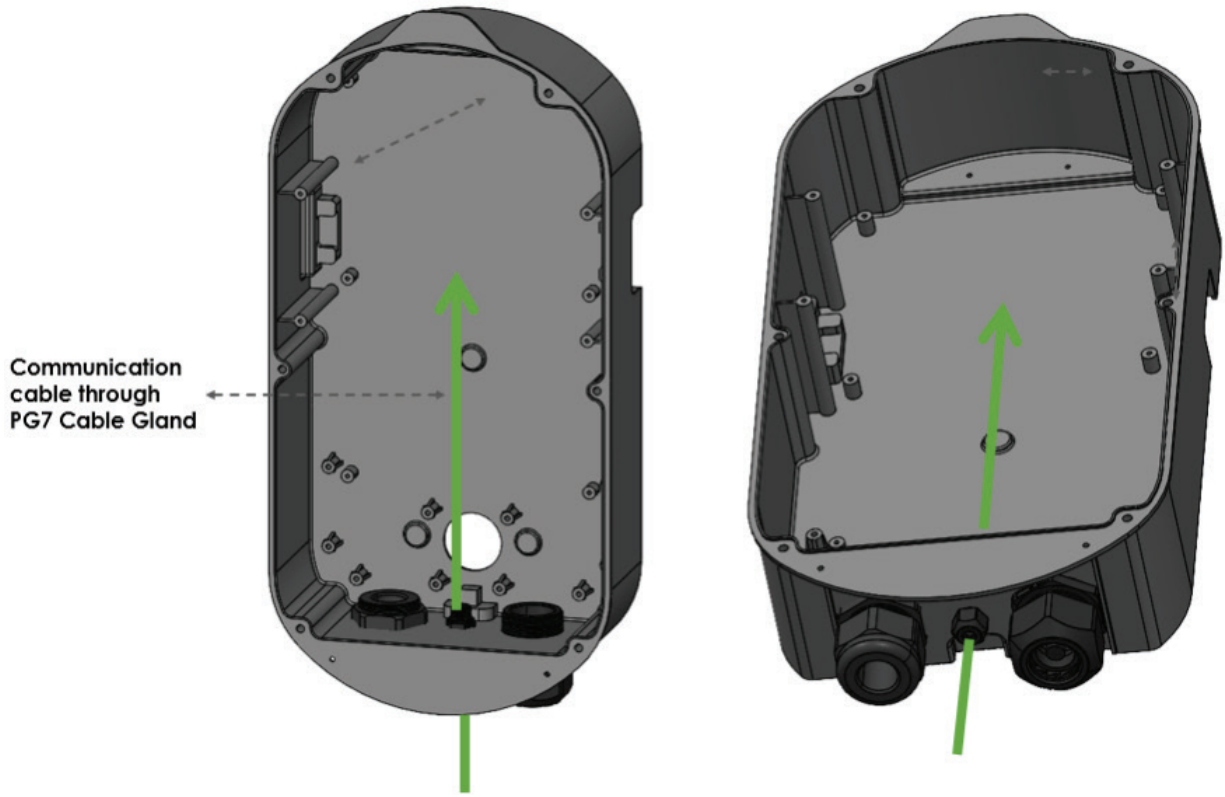

Fig. 4 – Ethernet cable penetration

- When the station is connected via an Ethernet cable, no additional setup is required.
- **NOTICE**
  Ethernet wiring must be run in a separate conduit from the AC input power wires to avoid interference.

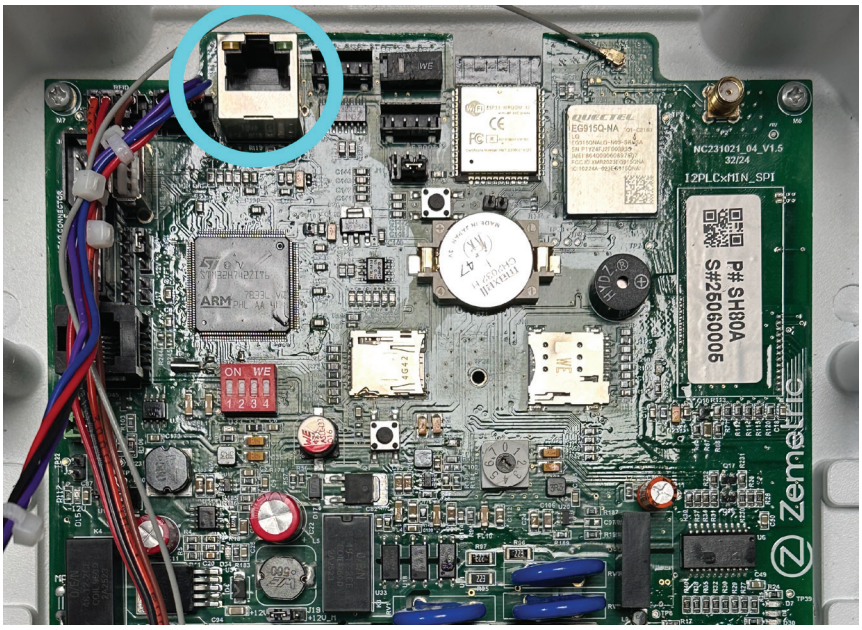

Fig. 5 – Ethernet port location

 Copyright © 2026 Blink Charging Co. All rights reserved.

3.3. NETWORK PLATFORM REQUIREMENTS

NOTICE

To enable modified output configurations or load management configurations, Blink must be notified during station commissioning. Failure to do so may result in nuisance breaker tripping and/or system damage. Refer to the Station Commissioning section of this manual (Section 8) for details.

3.4. TOOLS REQUIRED FOR INSTALLATION

Note: Does not include tools required for installation of electrical conduit

#	Tool	Notes
1	Metric Allen Keys	2.5mm, 3mm, 4mm, 5mm
2	Security Torx bit	T25, T30
3	Phillips screwdriver	
4	Torque Wrench	Required for Input/Output AC terminal connections (0 – 11Nm) & Ground terminal connection (0 – 3.95Nm)
5	Wire Stripping tool	
6	Wire Crimping tool	For 8 AWG and 2 AWG ferrules
7	Masonry Drill Bit(s) & Driver	

Table 4 – Tools Required for Installation

Copyright © 2026 Blink Charging Co. All rights reserved.

4. CHARGING STATION - PACKAGE CONTENTS

4.1. SHASTA 80

Part	Qty	Image
Shasta 80 Charging Station Head Unit	1	
Wall Mounting Bracket	1	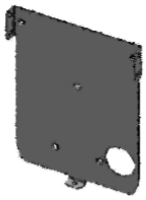
Holster Bracket Assembly with L-Bracket	1	
Cable Hanger	1	
J1772 Holster (J1772 model only)	1	

 Copyright © 2026 Blink Charging Co. All rights reserved.

NACS Holster (NACS model only)	1	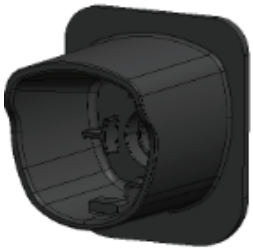
Wall Mounting Screws with Nylon Plug (No 10 2.5”)	11	
Holster Mounting Screws - Socket Head Hex (M4x8mm; pre-assembled)	4	
Wall Mount Bracket Screws - Button Head T25 Security Torx (M4x12mm; pre-assembled)	5	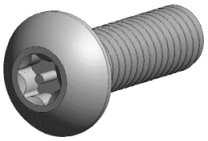
Holster Bracket Mounting Screws – Socket Head Hex (M6x20mm; Pedestal Installation only)	2	
Holster Plate Mounting Screws – Button Head Hex (M6x20mm; Pedestal Installation only)	4	
Input AC Wire Ferrite	1	
Cable Clamp (2 pcs)	2	
Cable Clamp Screws – Button Head Hex (M4x25mm)	4	

Copyright © 2026 Blink Charging Co. All rights reserved.

2 AWG Ferrule	2	
8 AWG Ferrule	1	
PG-29 Cable Gland Plug	1	
Product Postcard	1	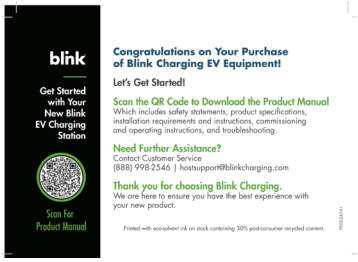

Table 5 – Charger box contents

5. CHARGING STATION INSTALLATION

5.1. IMPORTANT SAFETY INSTRUCTIONS

⚠ WARNING

Improper connection of the equipment-grounding conductor is able to result in a risk of electric shock. Check with a qualified electrician or serviceman if you are in doubt as to whether the product is properly grounded. Do not modify the plug provided with the product – if it will not fit the outlet, have a proper outlet installed by a qualified electrician.

⚠ WARNING

To reduce the risk of fire, electric shock, or injury to persons:

- Read all the instructions carefully before installing & using the product.
- Do not use this device if it is damaged, has visible cracks, or is missing parts.
- Connect only to properly grounded outlets and circuits in accordance with all local electrical codes.
- Do not install or use the equipment near flammable materials, vapors, or in wet environment unless rated for such use.
- Installation & Servicing should only be performed by qualified personnel.
- Disconnect the power at the breaker panel before servicing or cleaning the unit.

 Copyright © 2026 Blink Charging Co. All rights reserved.

5.2. WALL MOUNT INSTALLATION

Fig. 6 – Shasta 80 Wall Mount Installation

5.2.1. SITE LOCATION

The charging station should be positioned such that the distance between the charging station and electric vehicle is sufficient to minimize the likelihood of damage (suggested min. 3 ft). Two alternatives are illustrated below:

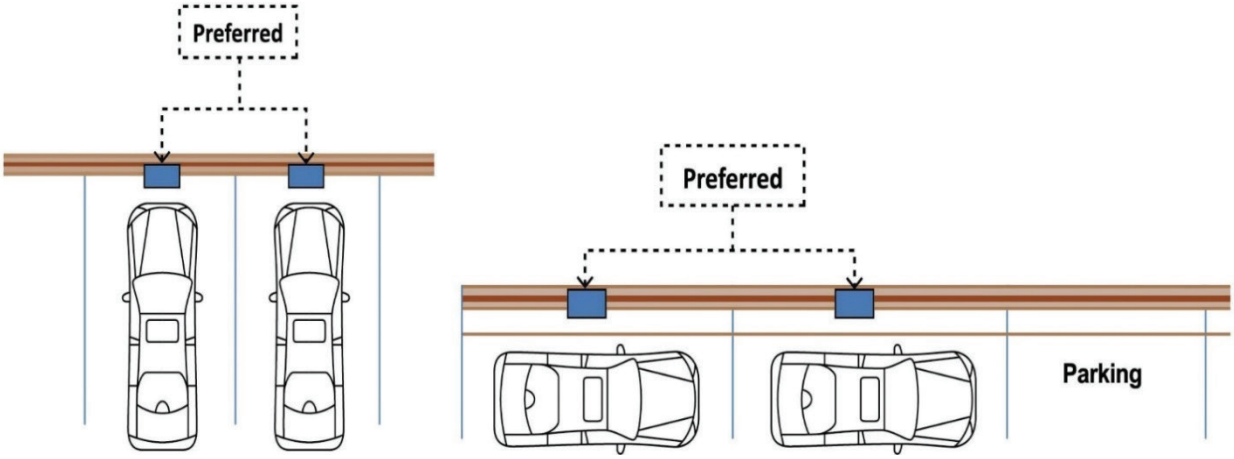

Fig. 7 – Site location recommendations

Copyright © 2026 Blink Charging Co. All rights reserved.

5.2.2. PREPARING THE WALL

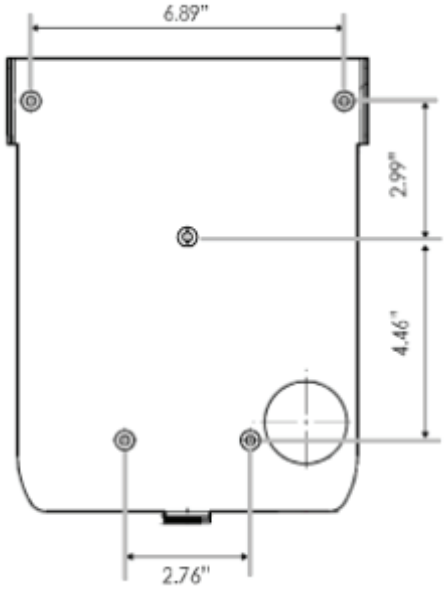

Fig. 8 – Wall Mount bracket template

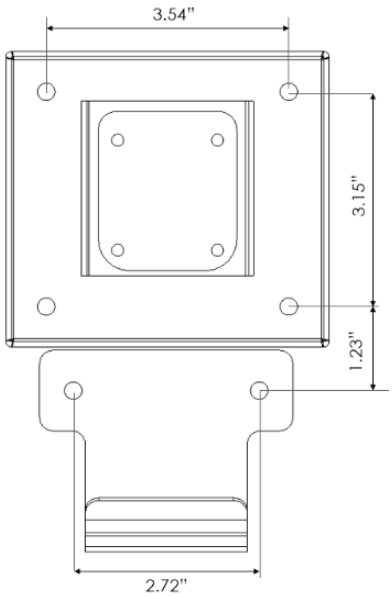

Fig. 9 – Cable Hanger bracket template

- At the selected location, install the wall mount such that the top of the bracket is at a height of 46 inches (Check local codes).
- The equipment should be installed at least 20 inches above the floor.
- Ensure the wall mount bracket is in an upright position and level.
- Mark locations for the bolts before drilling mounting holes.
- If the wall is made of solid concrete or brick, use the provided anchor bolts to secure the wall-mount to the wall. For walls other than concrete, use fasteners appropriate for the material.

 Copyright © 2026 Blink Charging Co. All rights reserved.

- Electrical input wiring can enter the charger head unit either from the rear (through the 1-3/8” hole on the back of the head unit) or from the bottom. If the input wiring enters the from the rear (through the wall), mark and drill the conduit penetration location before installing the wall mount.
- If the electrical conduit is run on the outside of the wall, use the 1-3/8” hole on the bottom of the charger head unit as the entry point (maximum conduit size 1”).
- Ensure at least 18” (+ wall thickness for rear entry) of wire extends out of the conduit.

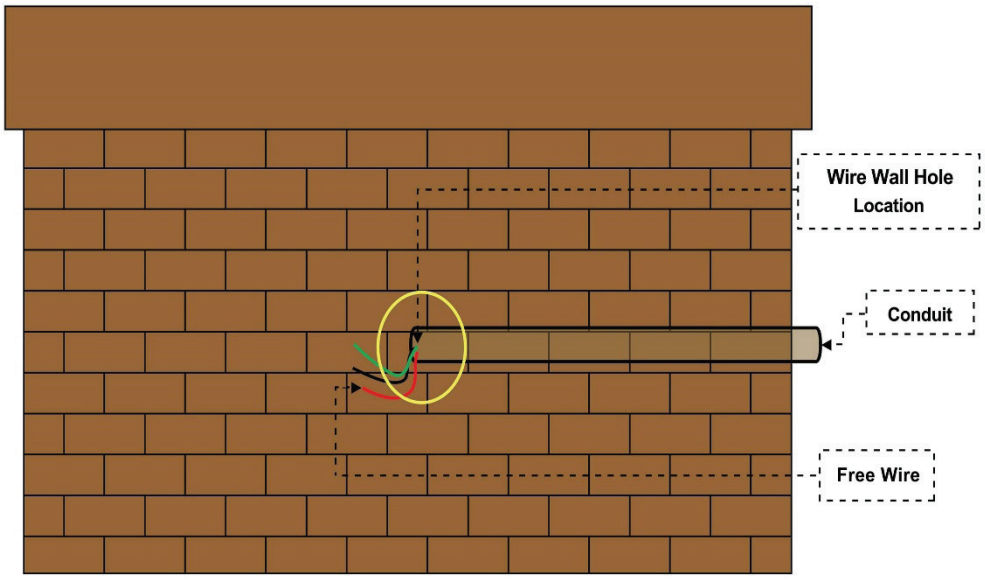

Fig. 10 – Wall preparation

5.2.3. PREPARING THE HOLSTER

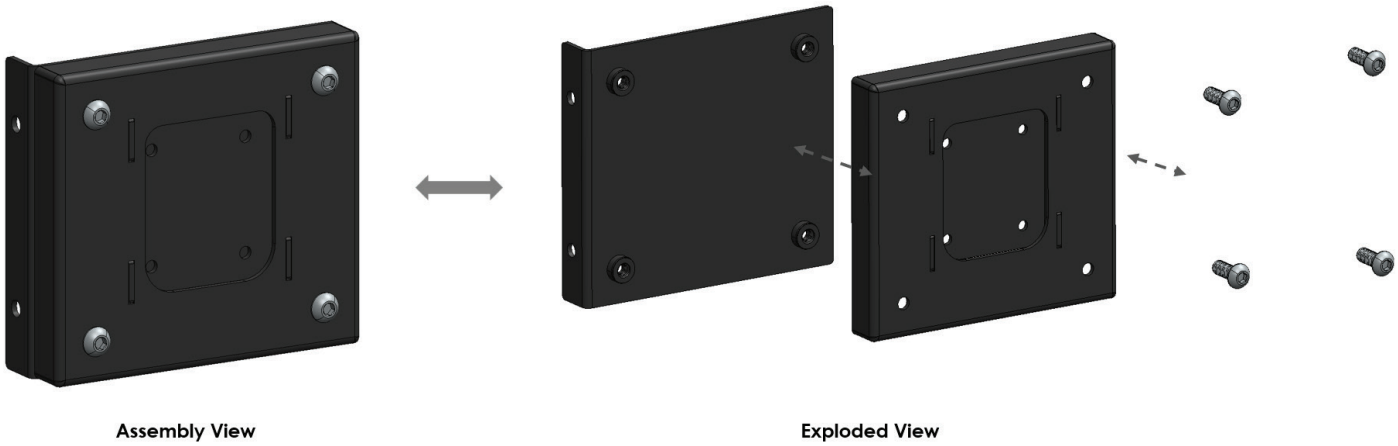

Fig. 11 – Holster Preparation

- Before proceeding with the wall mounting of the holster, detach the L-Bracket from the Holster assembly by removing 4 screws (the L-bracket is only required for pedestal installation).

Copyright © 2026 Blink Charging Co. All rights reserved.

5.2.4. WALL MOUNT BRACKET, HOLSTER & CABLE HANGER INSTALLATION

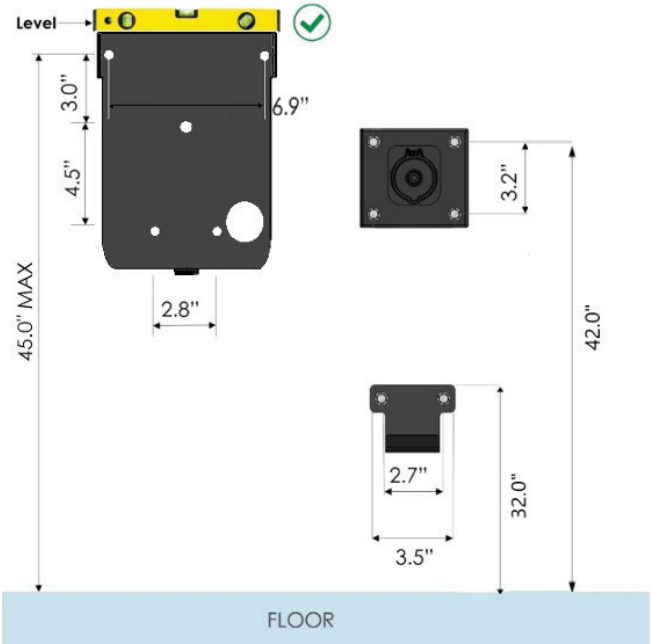

Fig. 12 – Wall mount dimensions

- Secure the wall mount bracket with the provided anchor bolts (if concrete or brick wall), or with appropriate fasteners (for other material).
- Secure the cable hanger and holster bracket using the provided anchors as shown in the above graphic.
- Install the appropriate holster (J1772 or NACS) to the holster wall bracket using the provided M4x8mm screws.

5.2.5. HEAD UNIT INSTALLATION

Fig. 13 – Head Unit mounting to Wall Bracket

 Copyright © 2026 Blink Charging Co. All rights reserved.

⚠ CAUTION

- Refer to General Requirements section for station weights.
- Carefully place the charging station head unit on top of the wall mount bracket as shown in the illustration.
- Align the guide poles in the wall mount bracket with the base of the head unit.
- Secure the charging station head unit to the wall bracket with the 5 mounting screws (M4x12mm - two from right and left side and one from bottom side).
- Ensure that the charging station is plumb using a level. Check that the head unit is now securely fastened to the wall mount.

5.3. PEDESTAL INSTALLATION

Fig. 14 – Pedestal installation

Copyright © 2026 Blink Charging Co. All rights reserved.

5.3.1. ECO PEDESTAL PACKAGE CONTENTS

Part	Qty	Image
ECO Pedestal Assembly	1	
ECO Pedestal Drill Template	1	
M5x15mm screws and nuts (for Wall Mount Bracket, Cable Hanger Bracket, and Holster Bracket)	8	
T30 Tamper-Resistant Torx Driver Bit	1	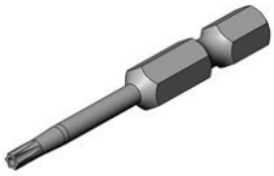
M12 Concrete Anchor Bolts	4	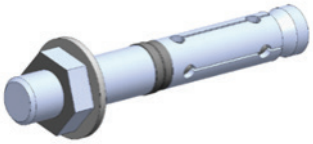

Table 6 – Pedestal package contents

 Copyright © 2026 Blink Charging Co. All rights reserved.

5.3.2. ECO PEDESTAL UNBOXING AND DISASSEMBLY

Unbox and disassemble the Pedestal unit as shown below:

1. Remove top cover (M6x60mm tamper-resistant Torx screws) and Mounting bracket (M10x20mm bolts)

Fig. 15 – Pedestal disassembly step 1

2. Separate Pedestal Enclosure from Base Unit

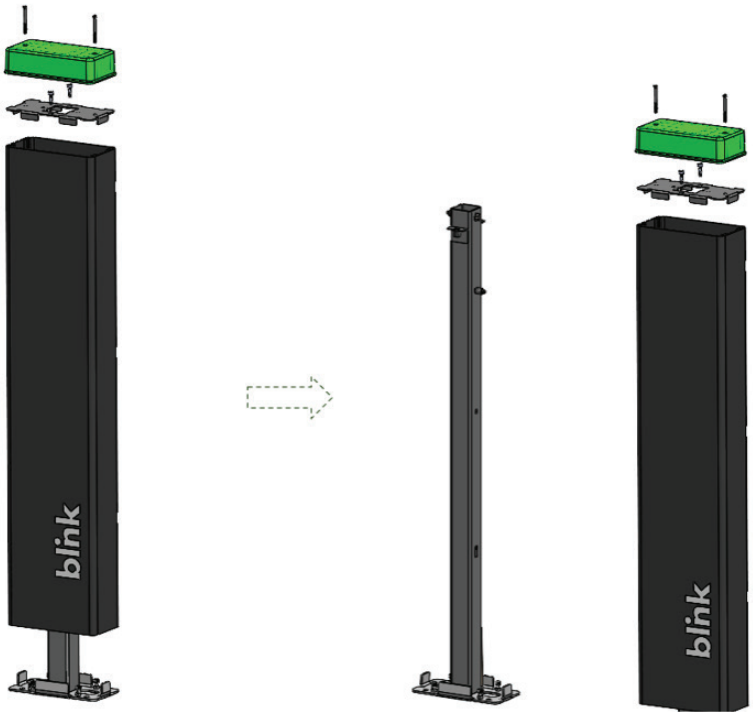

Fig. 16 – Pedestal disassembly step 2

Copyright © 2026 Blink Charging Co. All rights reserved.

Ensure that the box contains the following items.

PARTS FOR ASSEMBLY		
ITEM	PARTS	QTY
1	ECO Pedestal Base Unit	1
2	ECO Pedestal Enclosure	1
3	ECO Pedestal Cover Plate	1
4	M10 x 20 mm, Universal Top Bracket Bolt	2
5	ECO Pedestal Mounting Bracket	1
6	ECO Pedestal Top Cover	1
7	M6 x 60mm Tamper-Resistant Button Head Torx Screws	2

Table 7 – Pedestal parts list

5.3.3. SITE LOCATION

Select the location for the charging station. To mount the charging station, first prepare a concrete pad properly aligned to the parking space. The concrete pad should be positioned such that the distance between the charging station and electric vehicle is enough to minimize the likelihood of damage.

NOTICE

Electrical wiring must be run through a conduit inside the concrete pad; the only wire penetration point on the pedestal is through the bottom.

NOTICE

The Blink ECO Pedestal can accommodate dual head unit mounting with one head unit on each side. The pedestal base has two (2) conduit openings which can each accommodate a single 1” trade size conduit (1 ½” outer diameter). If multiple conduits are required, they must be run using both conduit openings in the base. See below image for conduit spacing requirements.

5.3.4. PEDESTAL DRILLING TEMPLATE INSTALLATION

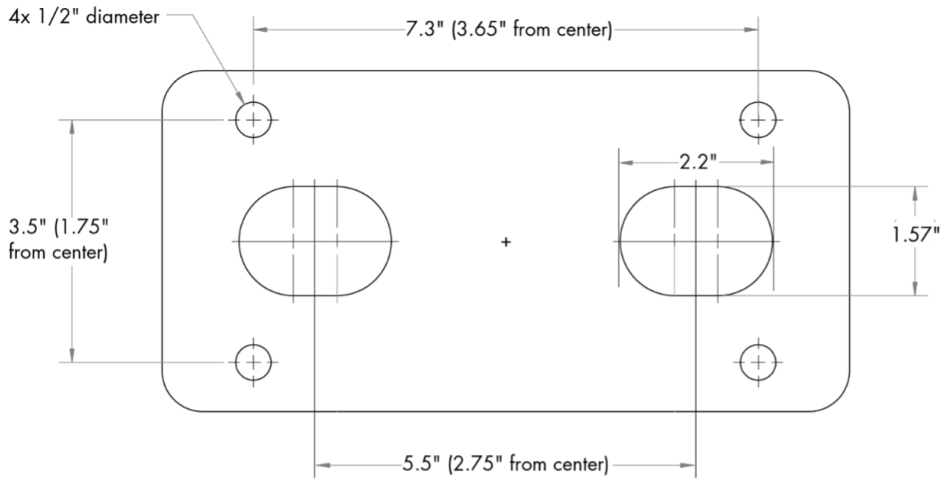

Fig. 17 – Pedestal drilling template dimensions

 Copyright © 2026 Blink Charging Co. All rights reserved.

- Ensure that at least 40” of wire extends out of the conduit (including Ethernet if applicable). Maximum conduit outer diameter is 1.5”. If two conduits are used, they must be run using both conduit openings (spaced 2.75” from the center of the pedestal).
- Install the Drilling Template using the provided concrete anchors, ensuring the anchors protrude roughly 0.7” above the Drilling Template. The Drilling Template should be installed flush with the ground.

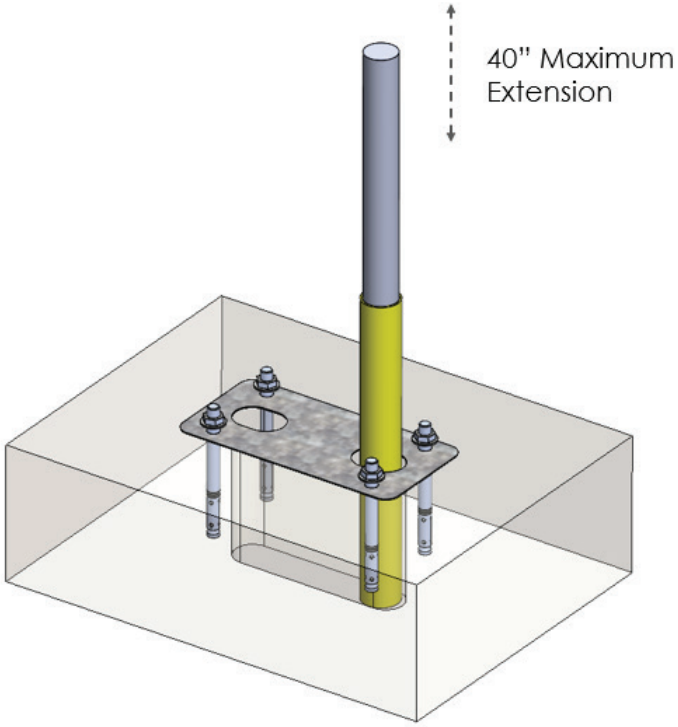

Fig. 18 – Drilling Template installation using concrete anchors

5.3.5. PEDESTAL INSTALLATION

Install Pedestal Base Unit:

⚠ WARNING

VERIFY ALL CONDUCTORS ARE DE-ENERGIZED BEFORE PROCEEDING.

- Remove nuts and washers from anchor bolts.
- Place the Pedestal Base Unit on the drilling template such that the bolt holes and conduit opening are aligned.
- Ensure that the electric wires are long enough that they can be easily accessed through the conduit hole in the pedestal enclosure.
- Re-install the anchor bolt nuts and washers, but do not tighten fully.
- Locate the (4) leveling screws on the pedestal base assembly. Adjust leveling screws to make Pedestal Base plumb (check with Level at two points separated by 90 degrees).

Copyright © 2026 Blink Charging Co. All rights reserved.

- Gradually tighten anchor bolts to secure the Pedestal Base. Re-check for plumb.

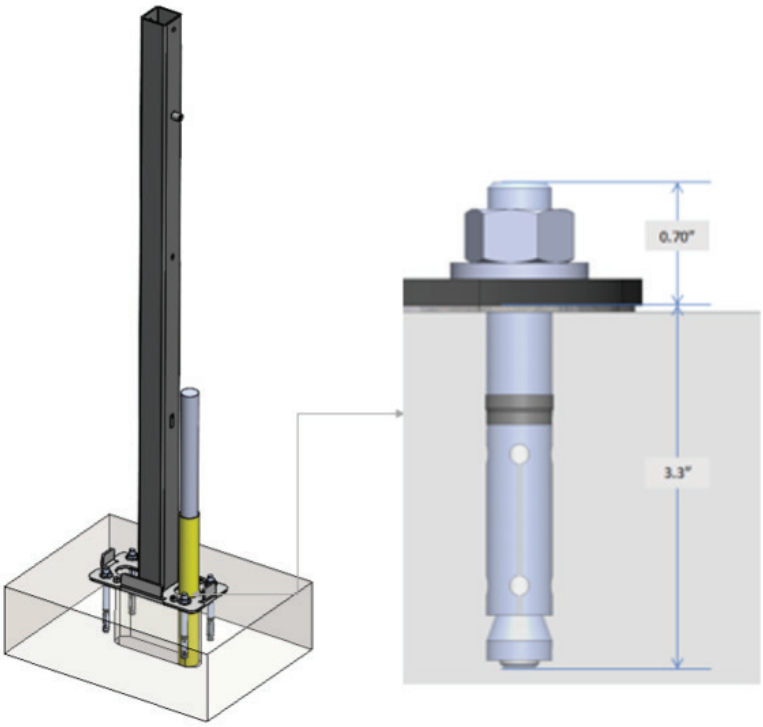

Fig. 19 – Installing pedestal base assembly

Install Pedestal Enclosure to Pedestal Base Unit:

- Position pedestal enclosure over pedestal base unit.
- Route electrical wiring through conduit hole in pedestal enclosure.

Fig. 20 – Installing pedestal bottom enclosure

 Copyright © 2026 Blink Charging Co. All rights reserved.

Install Wall-Mount Bracket, Cable Hanger Bracket, and Holster Bracket:

- Using the provided M5 x 15mm screws and nuts, install the Shasta charger's Wall Mount bracket, Cable Hanger bracket, and Holster bracket in the pre-drilled holes.

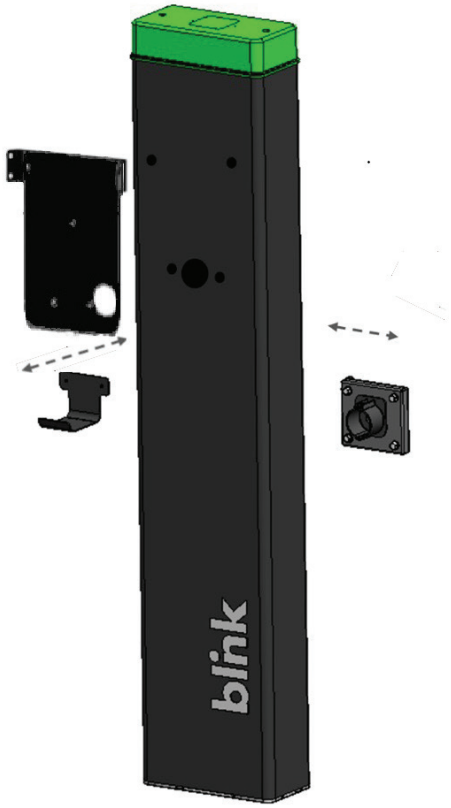

Fig. 21 – Charger mounting brackets installation

Complete Pedestal Assembly:

- Install mounting bracket using 2x M10x20mm bolts
- Install top cover using 2x M6x60mm bolts

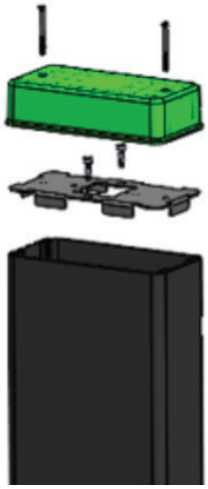

Fig. 22 – Install mounting bracket and top cover

Copyright © 2026 Blink Charging Co. All rights reserved.

5.3.6. RETROFITTING AN EXISTING PEDESTAL

Note: For retrofitting existing ECO pedestal or Triangular/Rectangular pedestal stock or replacing an existing IQ200 or MQ200 unit:

- Line the Shasta charger's wall mount bracket up with the upper 2 existing holes in the pedestal enclosure. Temporarily attach the wall mount bracket to the pedestal enclosure using the provided M5x15mm screws and nuts.
- Mark and drill additional ¼" mounting holes for the Shasta wall mount bracket as necessary, using the wall mount bracket itself as a guide.
- Drill 1+3/8" conduit hole in the enclosure using the wall mount bracket as a guide.
- Drill additional ¼" mounting holes for the cable hanger bracket and holster bracket, using the dimensions below as a guide for the height.

Legacy Eco Pedestal Retrofit (Mount holster to side of pedestal enclosure):

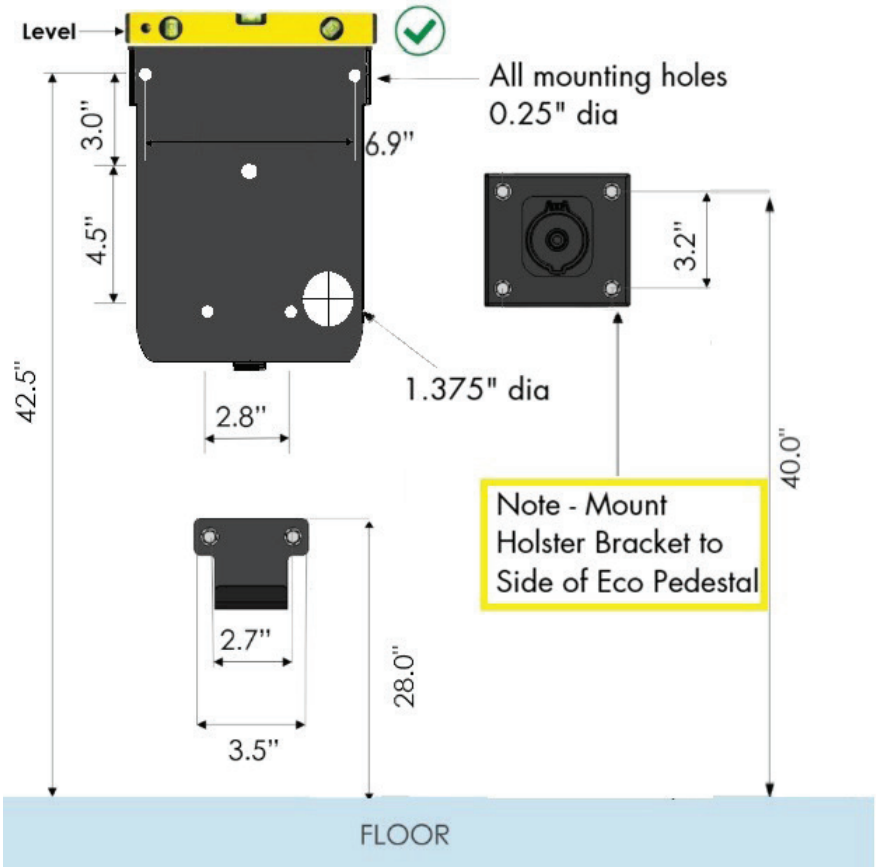

Fig. 23 – Legacy Eco pedestal retrofit dimensions

 Copyright © 2026 Blink Charging Co. All rights reserved.

Triangular/Rectangular Pedestal Retrofit (Mount holster to front of pedestal enclosure):

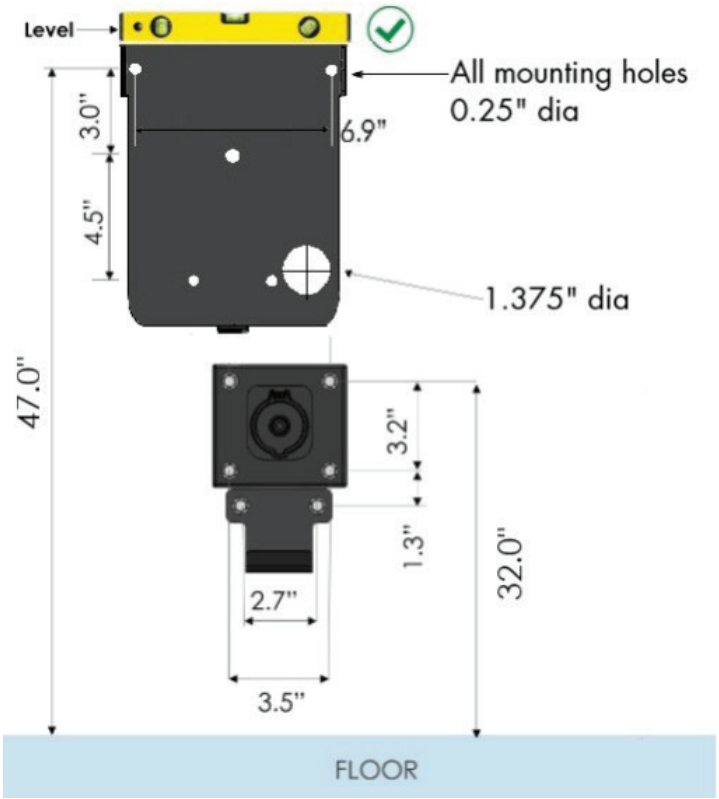

Fig. 24 – Triangular/Rectangular pedestal retrofit dimensions

5.3.7. CHARGER HEAD UNIT INSTALLATION

⚠ CAUTION

- Refer to General Requirements section for station weights.
- Carefully place the charging station head unit on top of the wall mount bracket as shown in the illustration.
- Align the guide poles in the wall mount bracket with the base of the head unit.
- Secure the charging station head unit to the wall bracket with the 5 mounting screws (M4x12mm - two from right and left side and one from bottom side).
- Ensure that the charging station is plumb using a level. Check that the head unit is now securely fastened to the wall mount.

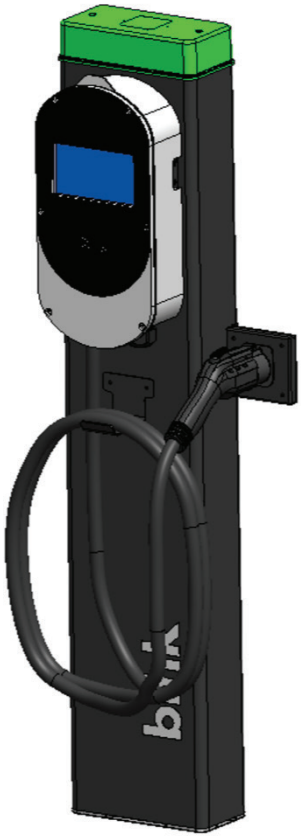

Fig. 25 – Head unit installation

Copyright © 2026 Blink Charging Co. All rights reserved.

5.4. CONNECTING INPUT WIRING AND OUTPUT CABLE

⚠ WARNING

VERIFY ALL CONDUCTORS ARE DE-ENERGIZED BEFORE PROCEEDING.

Refer to the wire color codes and strictly adhere to this convention while connecting the charging station and electrical supply wires. Incorrect wiring can lead to an electrical hazard.

⚠ WARNING

Improper connection of the equipment-grounding conductor is able to result in a risk of electric shock. Check with a qualified electrician or serviceman if you are in doubt as to whether the product is properly grounded. Do not modify the plug provided with the product – if it will not fit the outlet, have a proper outlet installed by a qualified electrician.

NOTICE

Note about removing the charger's front cover: After removing the charger's front cover, it is recommended to disconnect the RFID, TFT display, and cellular antenna connectors from the main PCB. Use care and caution when disconnecting and re-connecting the cellular antenna.

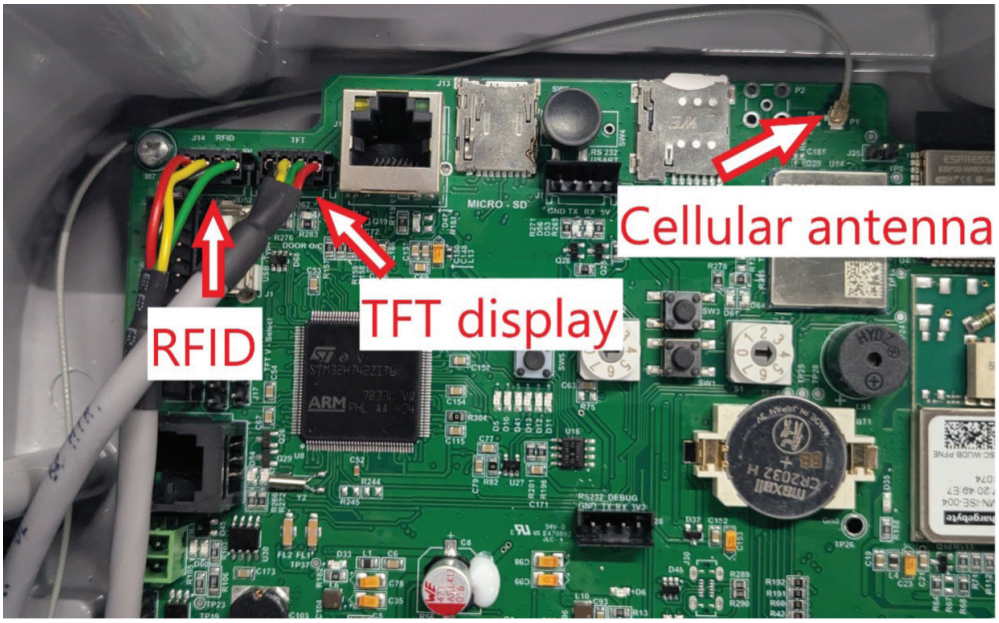

Fig. 26 – RFID, TFT, and cellular connections

 Copyright © 2026 Blink Charging Co. All rights reserved.

5.4.1. CONNECTING INPUT WIRING

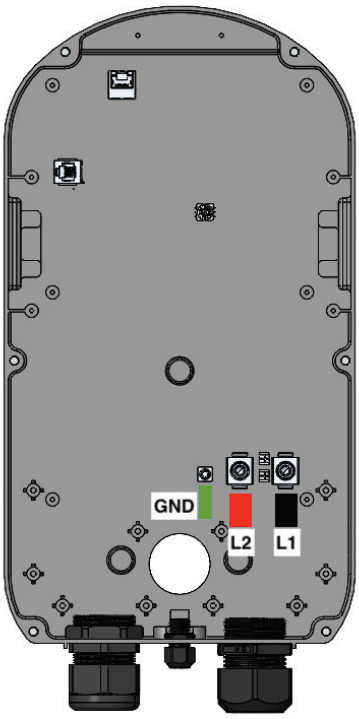

Fig. 27 – AC input wire connections

- If necessary, remove the charger's front cover.
- If electrical input wiring is run through the bottom of the head unit, secure the conduit before connecting the wiring inside the charger.
- Locate the AC input terminals for L1, L2, and GND.
- Cut the AC input conductors to length and strip insulation back 12mm (1/2")
- Crimp the L1 and L2 input conductors with the supplied 2 or 6 AWG ferrules
- Crimp the Ground input conductor with the supplied 8 AWG ferrule
- Pass the L1, L2, and Ground input conductors through the provided ferrite
- Insert the Ground conductor into the GND input terminal (Torque = 3.95 Nm)
- 208/240 VAC installation – insert the two-phase conductors into the L1 and L2 input terminals (Torque = 11 Nm)

5.4.2. CONNECTING OUTPUT CABLE

NOTICE

The Shasta charger is shipped with an 80-Amp J1772 or NACS charging cable depending on model/features. Installing a charging cable not provided by Blink may result in damage to the equipment.

- If necessary, remove the charger's front cover.
- Insert the output cable into the PG29 cable gland so that the cable jacket extends approximately 1" past the cable gland nut.
- Tighten the PG29 cable gland nut to secure the cable.

Copyright © 2026 Blink Charging Co. All rights reserved.

- Install the 2-piece cable clamp and screws (2.5mm hex).
- Locate the output terminals for L1, L2, GND, and low-voltage connections.
- Insert the GND conductor into the GND output terminal (Torque = 3.95 Nm) and the L1 and L2 conductors into the respective output terminals (Torque = 11 Nm).
- Insert the low-voltage conductors into the low-voltage terminal block as shown.
- Replace the charger's front cover.

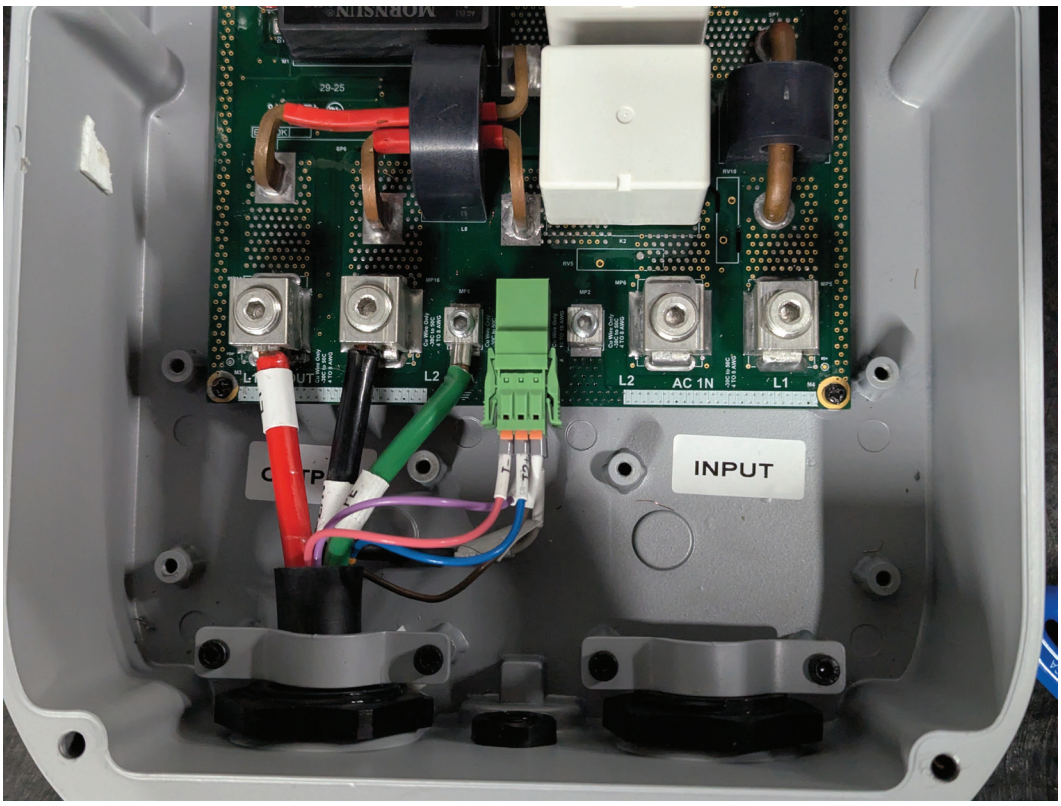

Fig. 28 – Output cable connections

J1772 (CP Only):

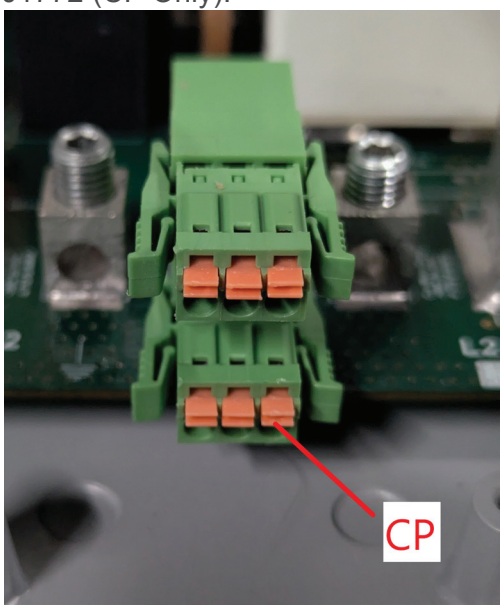

NACS:

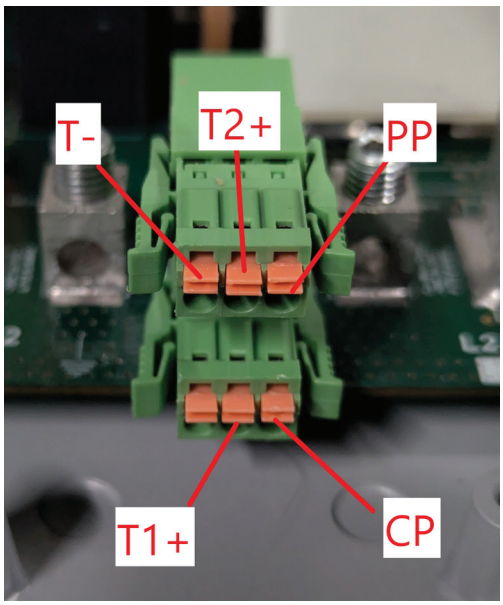

Fig. 29 – Output cable low-voltage connections

 Copyright © 2026 Blink Charging Co. All rights reserved.

5.5. DERATE SWITCH

The Derate Switch on the Shasta 80 chargers can be used to decrease the maximum AC current offered by the charger. If a modified output configuration is required (based on Table 1 in the Electrical Requirements section), follow these steps to derate the charger's output accordingly.

NOTICE

The Derate Switch must ONLY be adjusted by installers or Blink qualified service personnel.

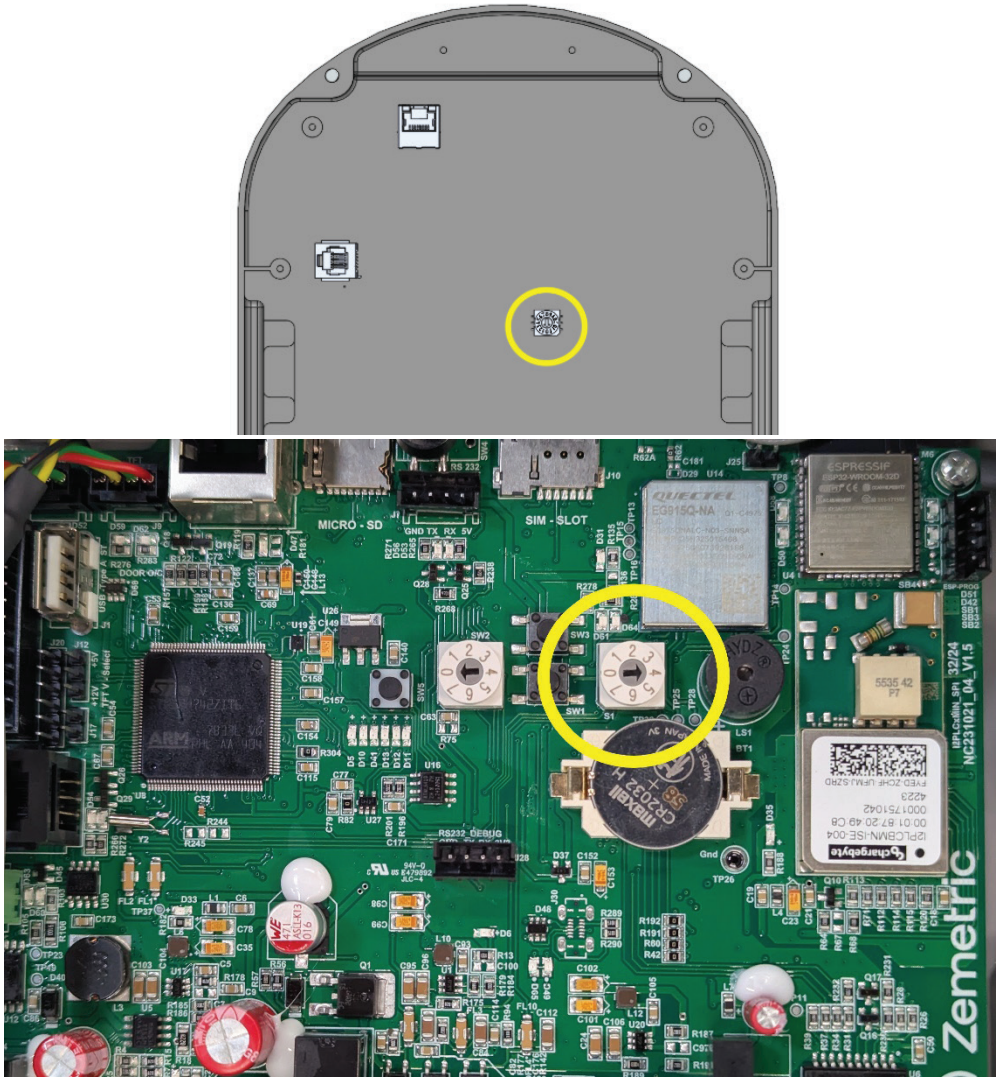

Fig. 30 – Derate switch location (labelled S1)

- To access the derate switch, first remove the charger's front cover if necessary.
- Using a small plastic screwdriver, set the derate switch (labelled S1) to the appropriate Derated Value from Table 6 below.
- Re-install the Front Cover.

Copyright © 2026 Blink Charging Co. All rights reserved.

SHASTA 80 DERATE SETTINGS		
CIRCUIT BREAKER SIZE	MAXIMUM OUTPUT	DERATE SWITCH SETTING
100A	80A	7
80A	64A	6
70A	56A	5
60A	48A	4
50A	40A	3
40A	32A	2
30A	24A	1
20A	16A	0

Table 8 – Circuit breaker size vs charger output configuration for Shasta 80

NOTICE

TO COMPLY WITH NEC REQUIREMENTS, THE CHARGER'S OUTPUT CURRENT MUST BE LIMITED TO 80% OR LESS OF THE INPUT CIRCUIT BREAKER RATING.

 Copyright © 2026 Blink Charging Co. All rights reserved.

6. CABLE MANAGEMENT SYSTEM (CMS) - PACKAGE CONTENTS

6.1. WALL MOUNT CMS PACKAGE CONTENTS

Part	Qty	Image
CMS Wall Mount Bracket	1	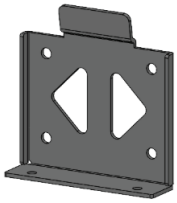
CMS Wall Mount Head Unit	1	
M12/1/2” Anchor Bolts	4	
CMS Cable Clamp Screw (M3 x 10mm)	2	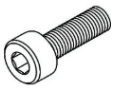
CMS Cable Cap Screw (M4 x 25mm Tamper-Resistant Torx)	4	
CMS Wall Mount Head Unit Mounting Screws (M6 x16mm Tamper-Resistant Torx)	2	
CMS Cable Clamp	1	

Table 9 – CMS package contents

Copyright © 2026 Blink Charging Co. All rights reserved.

7. CABLE MANAGEMENT SYSTEM (CMS) INSTALLATION

7.1. WALL MOUNTING CMS

7.1.1. SITE SELECTION

The charging station should be positioned such that the distance between the charging station and electric vehicle is sufficient to minimize the likelihood of damage (suggested min. 3 ft). Two alternatives are illustrated below:

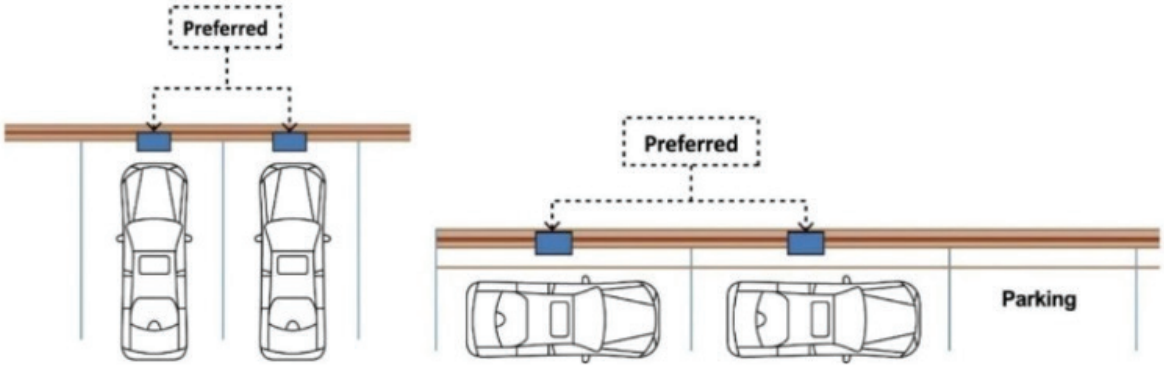

Fig. 31 – Site location recommendations

7.1.2. CMS WALL MOUNT BRACKET INSTALLATION

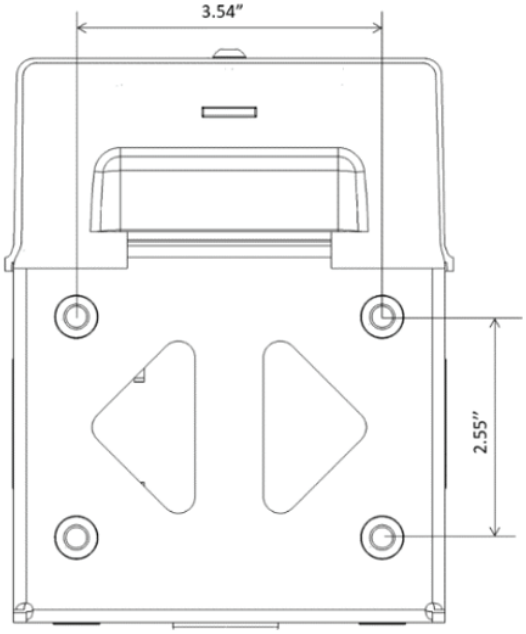

Fig. 32 – Cable management system wall mount bracket template

At the selected location, place the wall mount bracket on the wall such that the top of the bracket is at a height of 91.5 inches (Check local codes).

- If the wall is made of solid concrete or brick, use anchor bolts to secure the wall-mount to the wall. For walls other than concrete, use fasteners appropriate for the material.

 Copyright © 2026 Blink Charging Co. All rights reserved.

7.1.3. CMS WALL MOUNT HEAD UNIT INSTALLATION

- Carefully place the CMS Wall Mount Head Unit on top of the CMS Wall Mount Bracket as shown in the illustration.
- Align the CMS Wall Mount Head Unit with the CMS Wall Mount Bracket.
- Secure CMS Wall Mount Head Unit to the Wall Mount Bracket with (2) M6 x16mm Tamper-Resistant Torx screws (from bottom side).

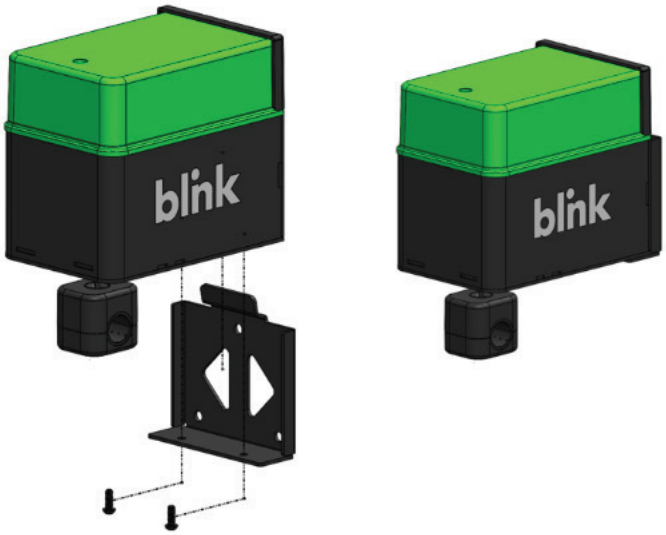

Fig. 33 – CMS wall mount head unit installation

7.1.4. CMS CABLE CLAMP INSTALLATION

- Put both sides of the CMS Cable Clamp at approximately the midpoint of the charging cable.
- Use (4) M3 x 10mm to assemble the CMS Cable Clamp to the charging cable.

Fig. 34 – Installing CMS cable clamp

Copyright © 2026 Blink Charging Co. All rights reserved.

- Use (2) M4 x 25mm Tamper-Resistant Torx screws to assemble the CMS Cable Bottom Cap to CMS Cable Top Cap

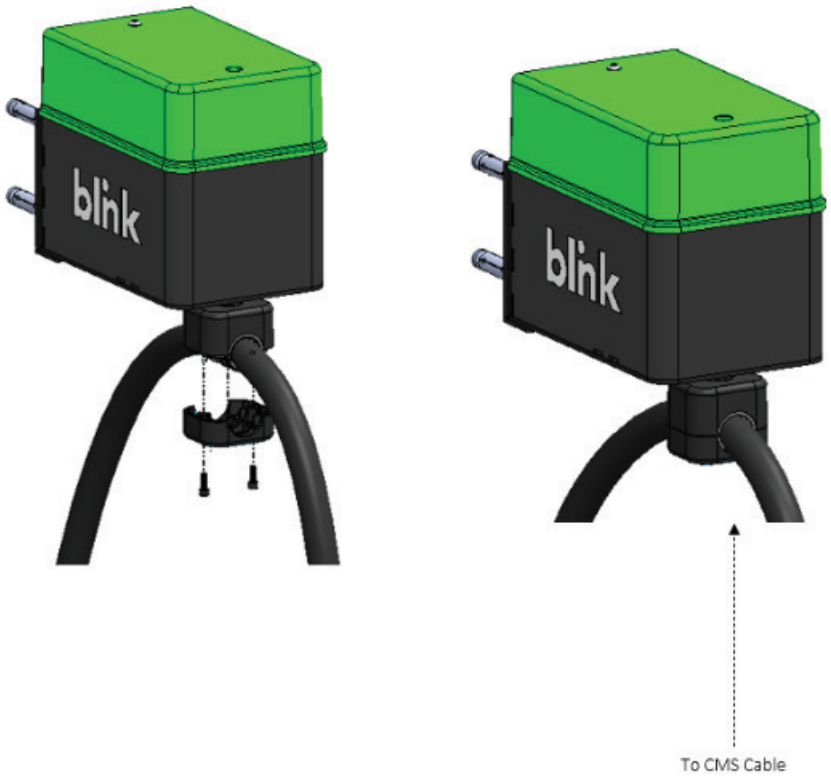

Fig. 35 – Installing CMS cable bottom and top caps

8. COMMISSIONING AND ENERGIZATION

8.1. STATION COMMISSIONING

After the stations have been installed and are energized, please fill out the Blink Level 2 EVSE Electrical Information form (linked below) and return it to Onboarding@Blinkcharging.com. You will need the station serial number(s) to complete the form. The serial numbers are located on bottom left-hand side of the station.

https://blinkcharging.com/resources/evse-installation/blink-level-2-evse-electrical-information-form

Once the form has been submitted, you will receive a case number (CAS-XXXXX) for your records.

For other inquiries related to station commissioning, please call Blink Customer Support at 888-998-2546

If modified output configurations are needed (per the guidelines in the Electrical Requirements section), please provide the following information for each station:

- Panel voltage: **(Example - 120/208V or 120/240V)**
- Circuit numbers & amperage feeding the charging stations: **(Example – CKT 37/39 2 Pole 60A)**
- Serial Numbers connected to each circuit number: **(Example: Z00****** Circuit 37/39)**

 Copyright © 2026 Blink Charging Co. All rights reserved.

If Load Management is needed, please provide the following information for each station:

- Panel(s) name: **(Example – PNL1B)**
- Panel(s) voltage & amperage: **(Example - 120/208V 225A)**
- Circuit numbers & amperage feeding the charging stations: **(Example – CKT 37/39 2 Pole 100A)**
- Serial Numbers connected to each circuit number: **(Example: Z00****** Circuit 37/39)**

8.2. INITIAL POWER-UP SEQUENCE

⚠ CAUTION

Be Aware of High Voltage!

After installation, station registration, and load management and/or modified output configurations have been completed (if applicable) the Blink station is ready to be energized.

1. Verify AC source breaker and any AC source isolation disconnects are OFF and locked out.
2. Verify no AC voltage is present at input terminals.
3. Verify input connections (L1, L2, and Ground/PE) are properly terminated and secure.
4. Check for any damage to the charger enclosure and mounting devices.
5. Verify all AC source equipment covers are installed and equipment is closed securely.
6. Remove Lockout equipment from AC source breaker or AC source isolation disconnect.
7. Energize charger at source breaker or isolation disconnect.
8. Verify AC voltage is 208/240V from L1 to L2 input terminals.
9. Verify AC voltage is 120V from each phase conductor to Ground/PE.
10. Close charger front cover.

8.3. WI-FI/CELLULAR/ETHERNET SETUP

1. Contact Blink Customer Support at 1-888-998-2546 to obtain the Shasta charger's Wi-Fi password and Web UI login credentials.
2. Power on the Shasta charger. Using a computer, tablet, or smartphone that supports Wi-Fi, browse for available Wi-Fi networks.
3. Connect to the Shasta charger's Wi-Fi network by selecting the SSID (Wi-Fi network name) corresponding to the unit's serial number (displayed on the unit's LCD screen or on the left side of the enclosure).
4. Enter the Wi-Fi password and connect to the network.
5. Once connected to the unit's Wi-Fi network, open an internet browser (Google Chrome, Mozilla Firefox, Safari, etc) and navigate to the IP address: 192.168.4.1

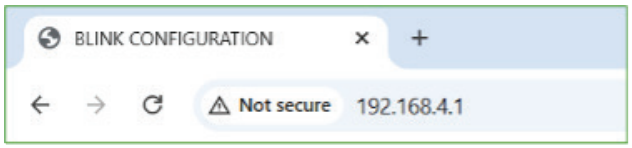

Fig. 36 – Shasta charger IP address

Copyright © 2026 Blink Charging Co. All rights reserved.

6. Log into the unit's Web UI by entering the user name and password provided by Blink:

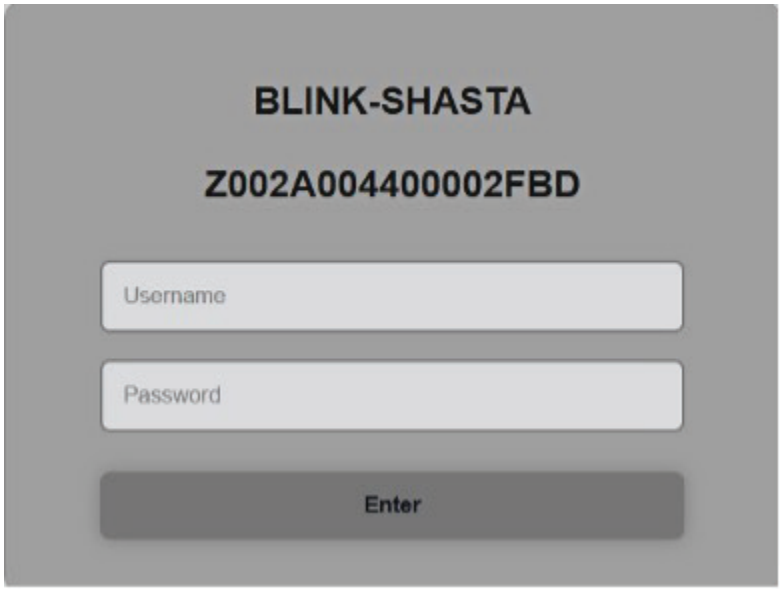

Fig. 37 – Web UI login

8.3.1. WI-FI SETUP

1. On the unit's Configuration page, navigate to the STA SSID field, and enter the SSID of the Wi-Fi network the unit will be connected to. Click "Save." The unit should beep twice to indicate the configuration has been updated.
2. In the STA Password field, enter the password for the Wi-Fi network the unit will be connected to and click "Save."

Fig. 38 – Setting Wi-FI SSID and password

3. Navigate to the bottom of the Configuration page and set "Enable Wi-Fi" to ON. Set "Enable Ethernet" and "Enable Cellular" to OFF if necessary.

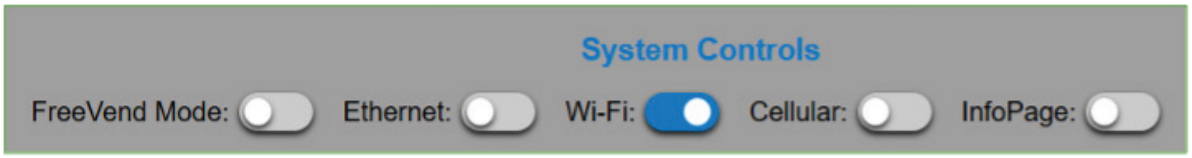

Fig. 39 – Enable Wi-Fi

4. Turn power to the unit OFF and back ON.
5. Confirm that the unit is connected via Wi-Fi by checking the indicator in the upper-right corner of its screen:

 Copyright © 2026 Blink Charging Co. All rights reserved.

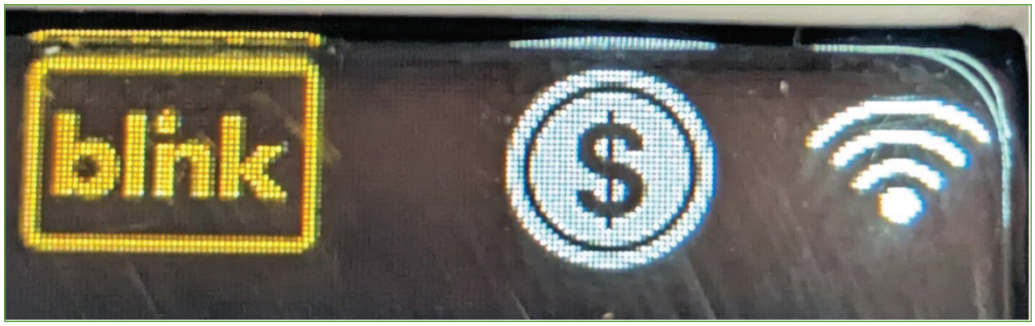

Fig. 40 – Wi-Fi indicator on charger screen

8.3.2. CELLULAR SETUP

1. On the Configuration page, navigate to the Network APN field. Enter the appropriate cellular APN (provided by Blink) and click “Save.” The unit should beep twice to indicate the configuration has been updated.

Fig. 41 – Setting cellular APN

2. Navigate to the bottom of the Configuration page and set “Enable Cellular” to ON. Set “Enable Wi-Fi” and “Enable Ethernet” to OFF if necessary.

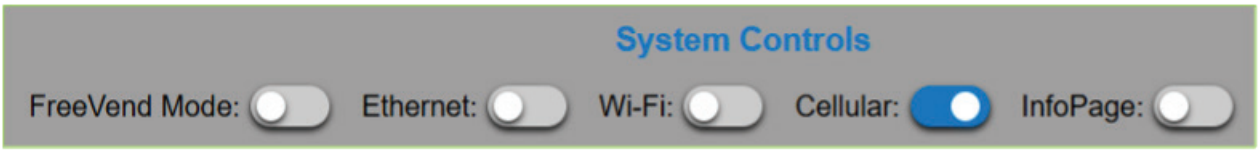

Fig. 42 – Enable cellular

3. Turn power to the unit OFF and back ON to establish a cellular connection.
4. Confirm the unit is connected via cellular by checking the indicator in the upper-right corner of its screen:

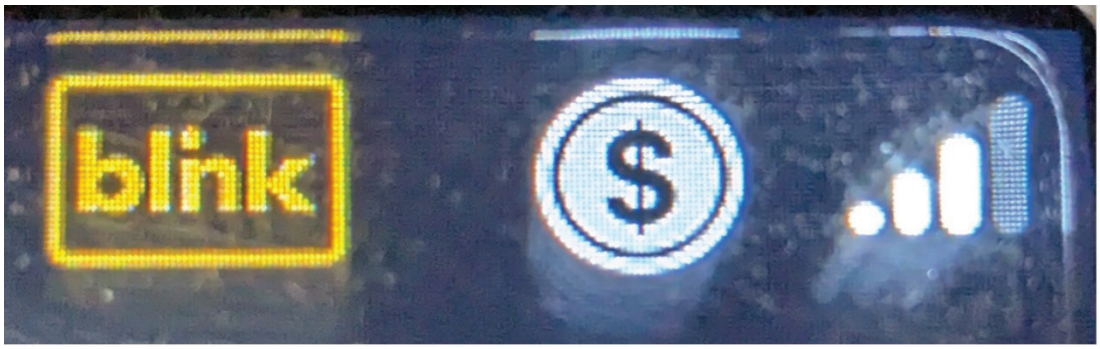

Fig. 43 – Cellular indicator on charger screen

8.3.3. ETHERNET SETUP

1. After connecting the Ethernet cable inside the unit, navigate to the bottom of the Configuration page and set “Enable Ethernet” to ON. Set “Enable Wi-Fi” and “Enable Cellular” to OFF if necessary.

Copyright © 2026 Blink Charging Co. All rights reserved.

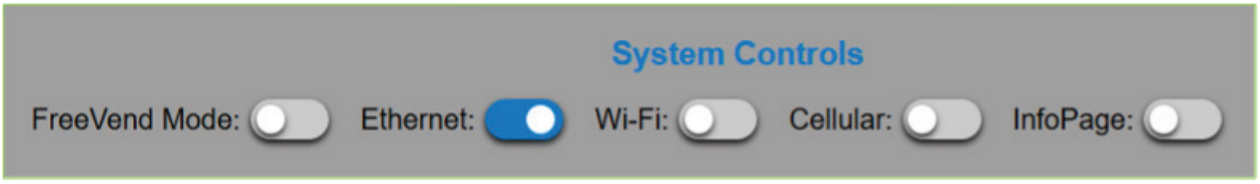

Fig. 44 – Enable Ethernet

2. Turn power to the unit OFF and back ON to establish an Ethernet connection.
3. Confirm the unit is connected via Ethernet by checking the indicator in the upper-right corner of its screen:

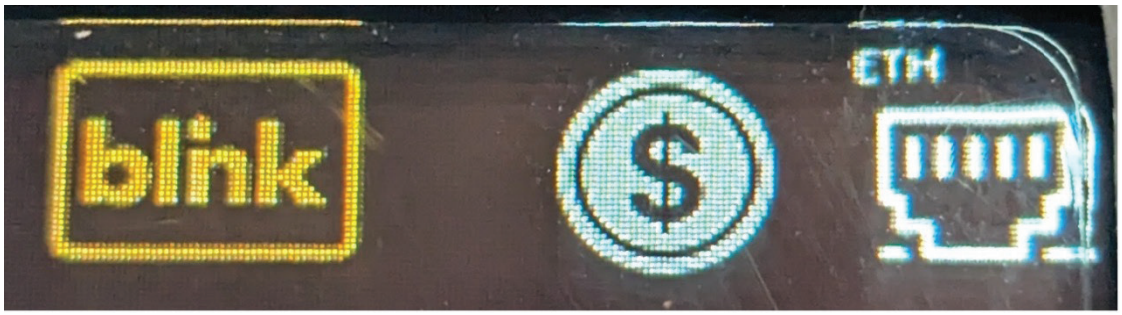

Fig. 45 – Ethernet indicator on charger screen

8.4. SIM CARD INSTALLATION

NOTICE

Note: The SIM card slot can only accommodate size 3FF/Micro SIM cards. ONLY install SIM cards provided by Blink.

- If necessary, remove the charger's front cover
- Locate the SIM card slot at the top of the main PCB and insert the SIM card as shown below:

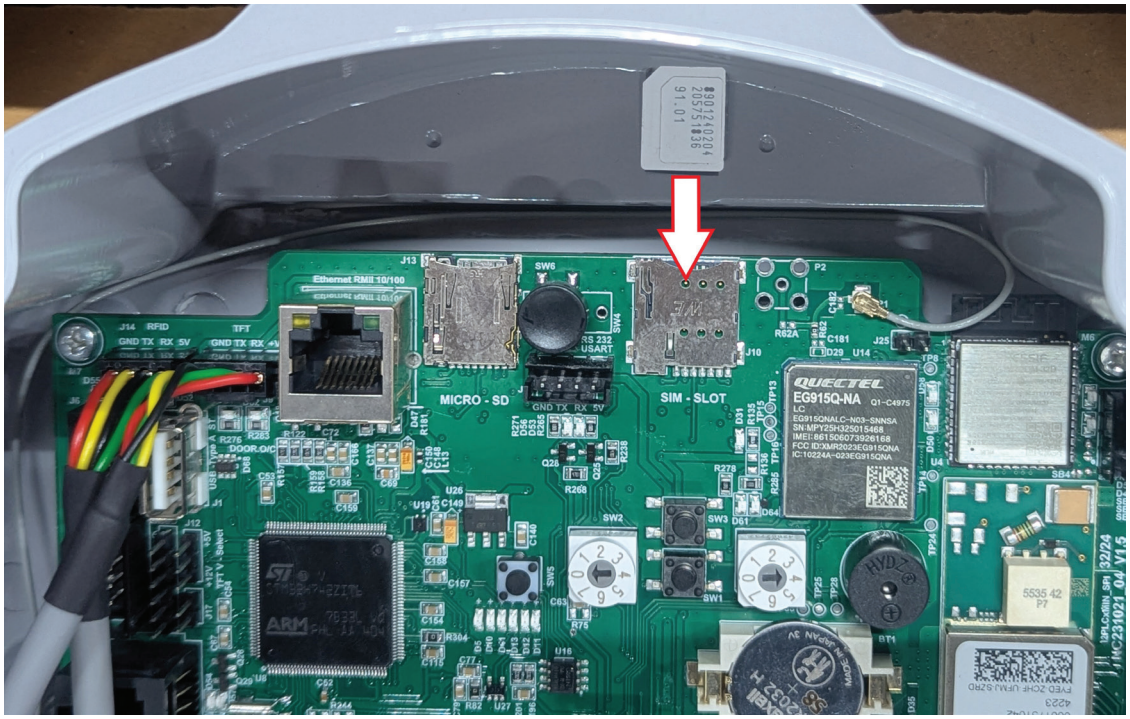

Fig. 46 – SIM card installation

 Copyright © 2026 Blink Charging Co. All rights reserved.

9. OPERATING INSTRUCTIONS

Read all the instructions before operating this product.

9.1. OPERATING PRECAUTIONS

⚠ WARNING

Please make sure that the unit is properly commissioned in accordance with the commissioning instructions before it is used.

⚠ WARNING

Do not use this product if the enclosure or charging connector is broken or open or if it is damaged or has been tampered with.

⚠ WARNING

Do not use the charger if there is water intruding into the charger.

⚠ WARNING

Do not use this product if the power cable or charging cable have any damage.

⚠ WARNING

Do not put any tool, material, finger or other body part into the charging connector or EV connector.

⚠ CAUTION

The product should be inspected by a qualified installer prior to initial use. Under no circumstances will compliance with the information in this manual relieve the user of his /her responsibilities to comply with all applicable codes and safety standards.

Copyright © 2026 Blink Charging Co. All rights reserved.

9.2. OPERATING INSTRUCTIONS

After the Shasta charger is installed, a charging session using an EV or EV simulator should be executed to ensure proper installation and operation. See the following LCD display example screens for reference:

9.2.1. IDLE STATE

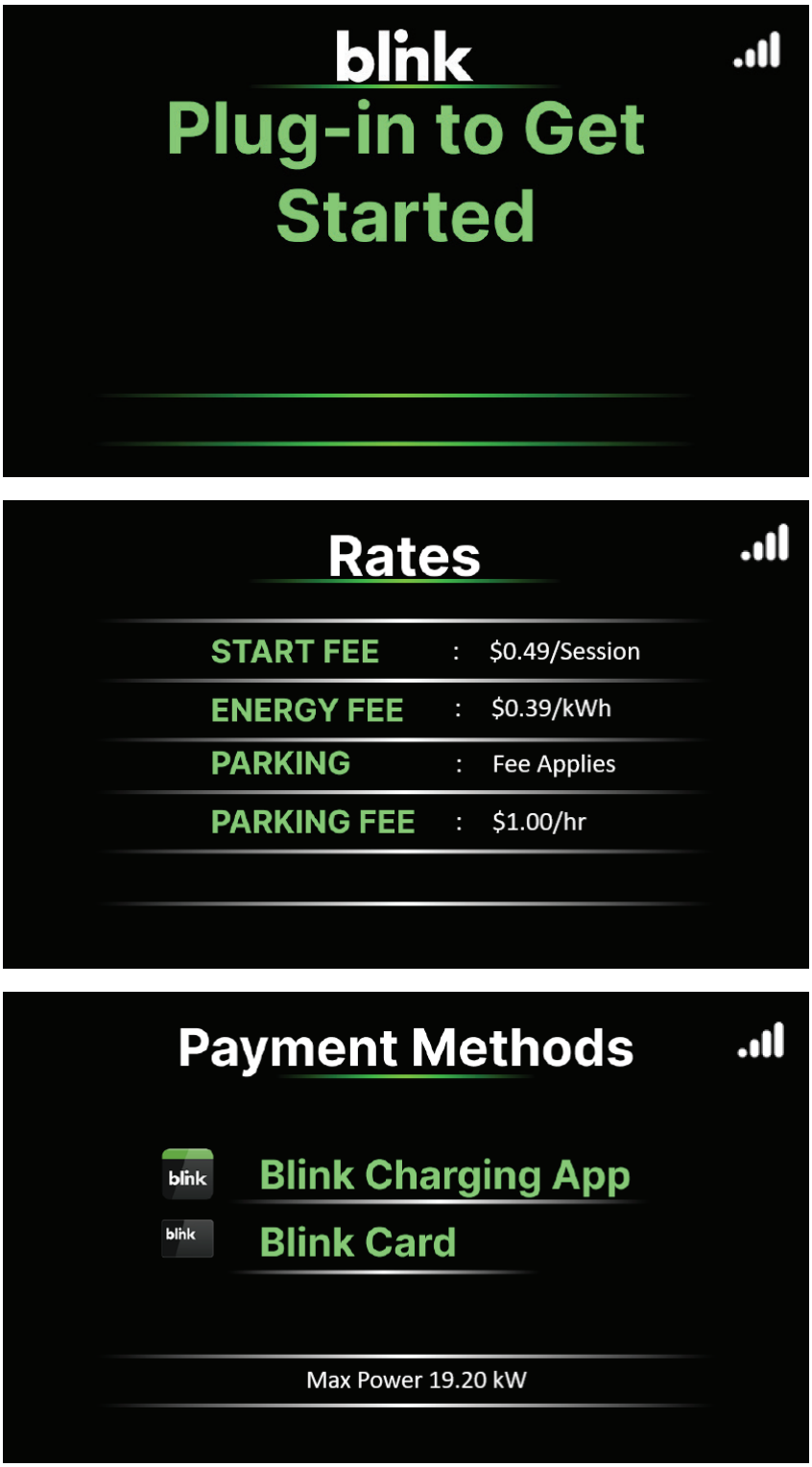

Fig. 44 – Idle State screens

 Copyright © 2026 Blink Charging Co. All rights reserved.

9.2.2. USER AUTHORIZATION

- Authorization can be done via RFID card, mobile app, mobile phone, or QR code (when using the Blink app)
- Authorization can be done either before or after plugging in

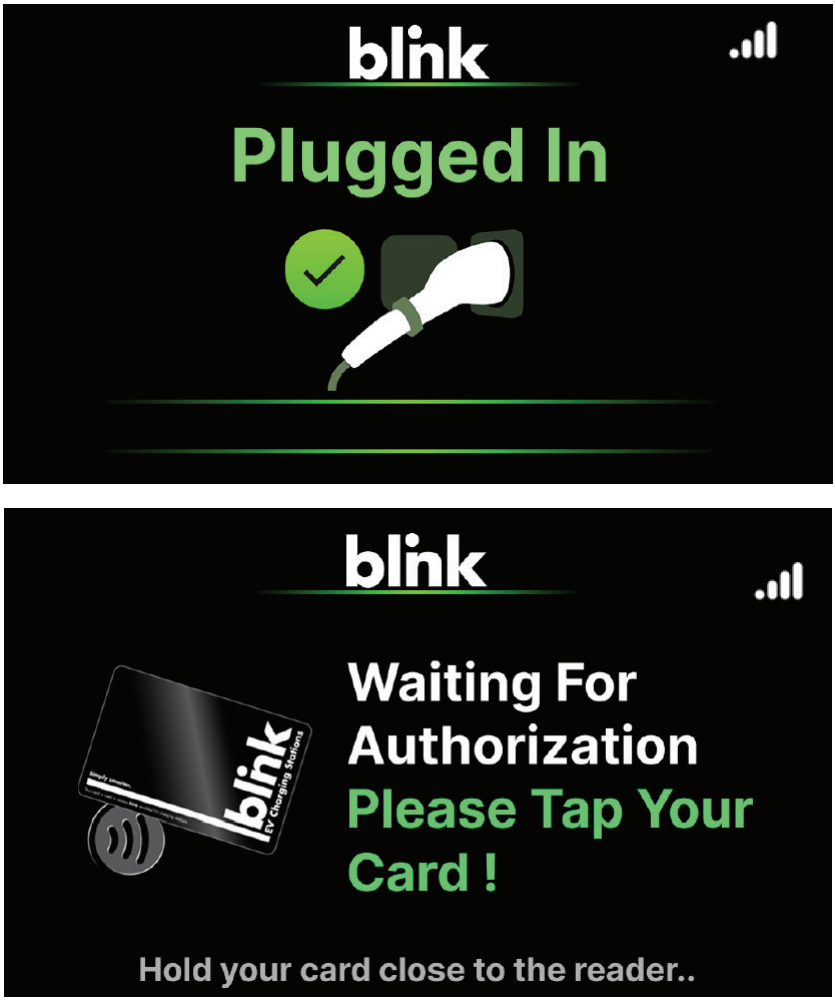

Fig. 45 – User Authorization screens

9.2.3. CHARGING

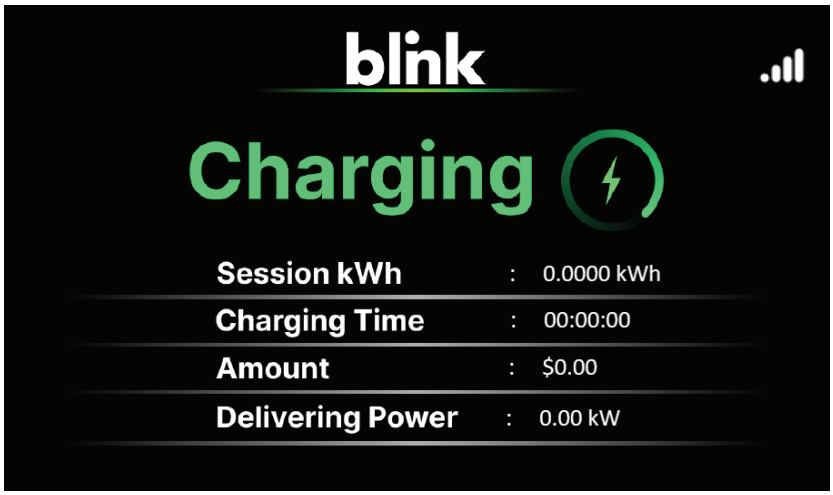

Fig. 46 – Charging screen

Copyright © 2026 Blink Charging Co. All rights reserved.

9.2.4. CHARGING COMPLETE

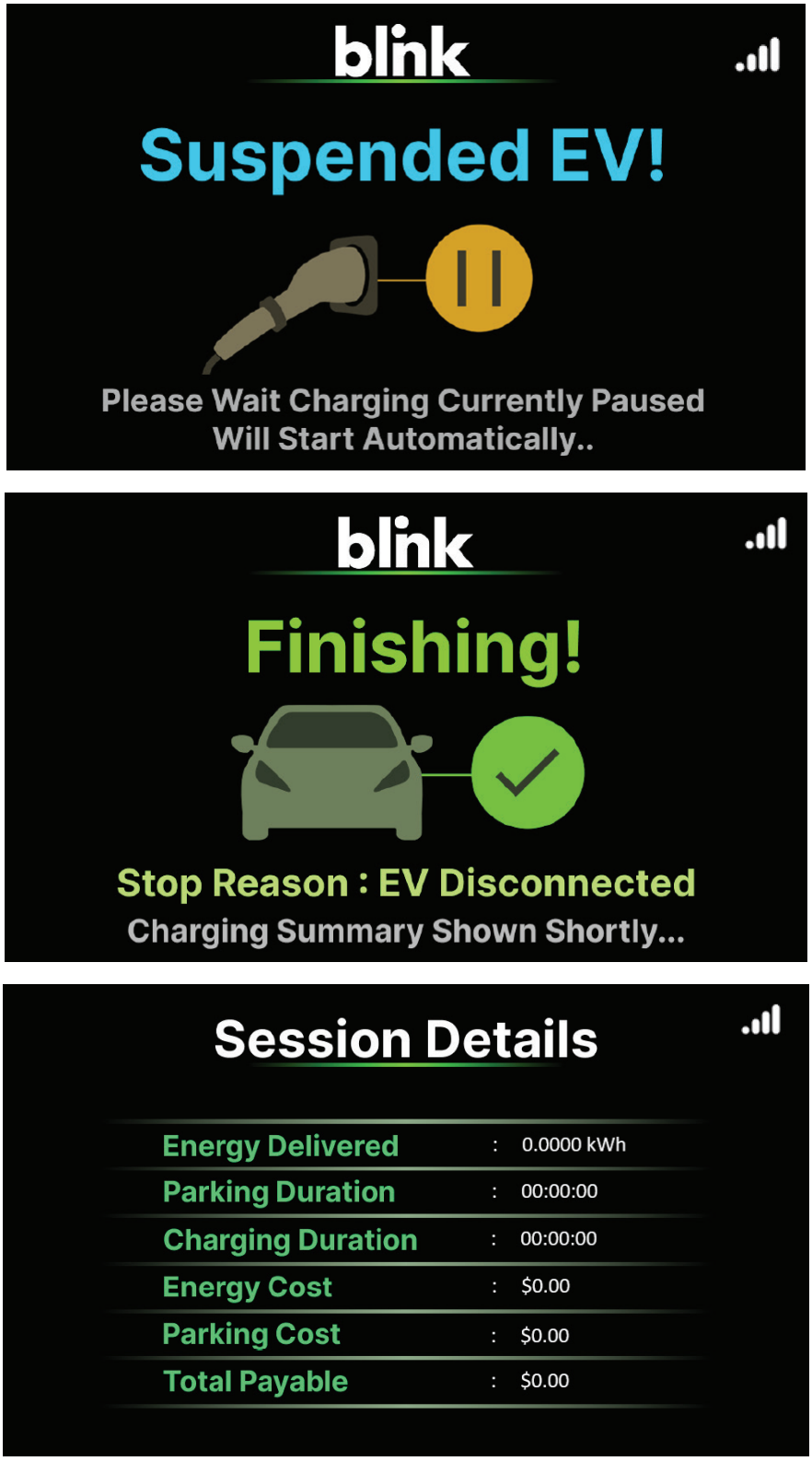

Fig. 47 – Charge Complete screens sequence

 Copyright © 2026 Blink Charging Co. All rights reserved.

9.3. TROUBLESHOOTING

When the charger encounters an error or fault condition, an error message will appear on the screen. An example is shown below:

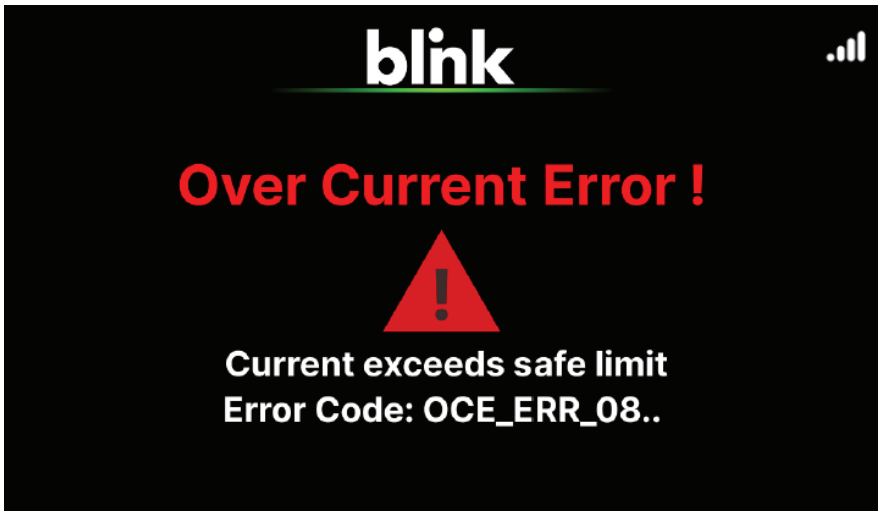

Fig. 48 – Error/fault screen

Error Code Reference list:

Error Message	Trigger Condition	System Response and Resolution
01 Wire Tampered	Charging cable cut or damaged	Site host is notified via e-mail. Charger is locked until the cable is restored and the unit is reset
02 Low Voltage	Input voltage below 167V	Charger is locked until the input voltage is restored and the unit is reset
03 High Voltage	Input voltage above 277V	Charger is locked until the input voltage is restored and the unit is reset
04 CCID Leakage Current	Ground fault current detected while charging	Charger is locked and must be reset
05 High Temperature	Charger's internal temperature exceeds 200˚F	Charger is locked and must be reset
06 Excess Current	Charging current exceeds pre-set limit	Charger is locked after 60 seconds, must be reset
07 Overcurrent	Charging current exceeds hardware limit	Charger is locked after 10 seconds, must be reset
08 System Ground Fault	Equipment grounding conductor not detected	Charger is locked and must be reset
09 Door Open	Charger's front cover is not secure	Site host is notified via e-mail. Charger is locked and must be reset once the front cover is secured
10 Contactor Failure	Output relay welded/faulty	Charger is locked and must be reset

Table 10 – Error code reference list

Copyright © 2026 Blink Charging Co. All rights reserved.

To report a charger fault or for assistance troubleshooting, contact Blink Customer Support at 888-998-2546

9.4. CUSTOMER SUPPORT

Please contact customer support

- If the enclosure or screen is broken, cracked, opened, or shows any other indication of damage.
- If there is damage to the charging connector, charging cable or holder of the charging connector
- If there is water intruding into the charger, please cut off the power source immediately and contact Blink customer success team for repair.

Please record the status code number (if any) on the LCD monitor before calling customer support.

Contact information for Blink customer support:

Customer Support: 888-998-2546 or support@blinkcharging.com

10. CLEANING AND MAINTENANCE

⚠ WARNING

Blink EV charging stations may be cleaned in accordance with the following guidance:

- Use clean, soft cloth along with mild detergent to wash the dirt off
- Pour water gently from the top and use a wet/dry cloth to clean all the sides
- **Do not use excessive water pressure**
- **Do not use strong detergents or any other chemicals (acids, petrol, thinner, or any other solvent)**
- **Avoid exerting excessive pressure on the device while cleaning**
- **Do not open the device**
- **Do not use a vacuum cleaner**

11.WARRANTY

The Limited Product Warranty (“The Warranty”) applies to the Blink Shasta chargers (stations) purchased from Blink or one of Blink’s authorized distributors or resellers. The Warranty shall cover the station from any manufacturer and/or workmanship defects for the period specified at the time of purchase. Upon verification of a valid warranty claim, Blink shall repair the station.

The following instances and events are not covered under the warranty policy (exclusions):

- Damage due to factors out of supplier’s control such as power surges, lightning, earthquake (i.e., “Acts of God”), etc.
- Damage due to negligence, failure to maintain the product, or any other event beyond Blink Charging’s reasonable control
- Alteration and/or modification to the product without prior approval from with Blink Charging
- Use of software, interfaces or parts not approved by Blink Charging

 Copyright © 2026 Blink Charging Co. All rights reserved.

- Any damage to the EV charging cord unless it is the result of manufacturing defects in the cord or connector assembly
- Acts of vandalism
- Abuse, physical damage, misapplication, or damages due to station usage not outlined in official Blink documentation
- Installation or relocation of the station unless performed by a certified electrician or Blink approved technician
- Improper site preparation or maintenance
- Consumables such as RFID card, cable, internal wires and connectors

For additional information about the warranty policy, please refer to the official Blink Limited Warranty documentation or contact a Blink representative via the contact information provided in this document.

Copyright © 2026 Blink Charging Co. All rights reserved.